VOI-SHAN MANUFACTURING COMPANY
A DIVISION OF VOI-SHAN INDUSTRIES, INC.

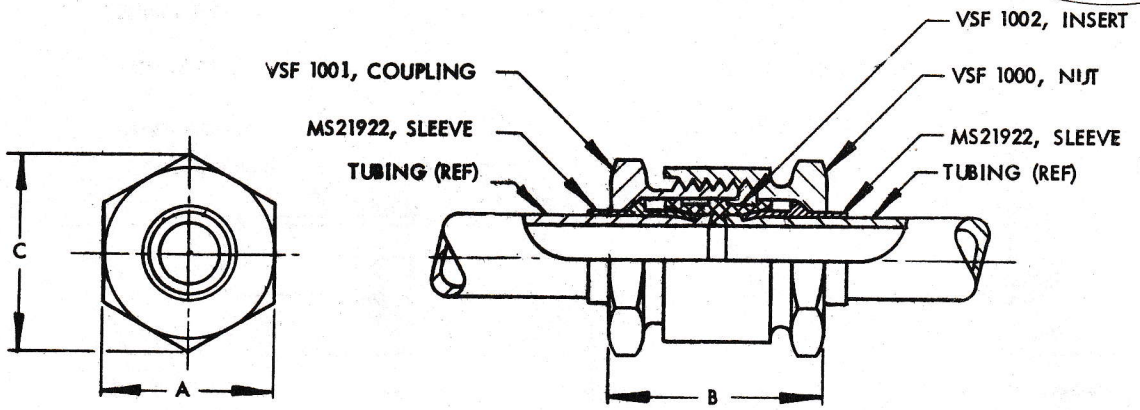

DASH NO.	TUBING SIZE O.D. (REF)	A HEX. FLATS (REF)	B ASSY. LENGTH (NOTE a)	C HEX. CORNERS (REF.)
- 4	1/4	.688	1.239	.794
- 5	5/16	.750	1.269	.866
- 6	3/8	.875	1.357	1.010
- 8	1/2	1.000	1.413	1.155
-10	5/8	1.125	1.518	1.300
-12	3/4	1.312	1.575	1.516
-16	1	1.562	1.645	1.804
-20	1-1/4	1.875	1.710	2.165
-24	1-1/2	2.125	1.760	2.454
-32	2	2.750	1.806	3.175

NOTES:

1. MS21922 SLEEVE TO BE PRE-SET ON TUBING IN ACCORDANCE WITH VOI-SHAN SPECIFICATION VS-VSF-6-1.
2. NORMAL TIGHTENING VALUES OF THE VSF1000 NUT ARE 1/6th TURN (1-HEX. FLAT) MINIMUM TO 1/3rd TURN (2 HEX. FLATS) MAXIMUM PAST THE POINT OF SHARP TORQUE RISE ON ALL SIZES AND ALL TYPES OF TUBE AND FITTING MATERIALS.

ENGINEERING INFORMATION:

a. ASSEMBLED LENGTHS REFLECT AVERAGE DIMENSIONS AND WILL VARY UPON CHANGE OF TUBE WALL THICKNESS AND MATERIAL FOR A GIVEN SIZE. NOT TO BE USED AS AN INSPECTION STANDARD.

b. REFER TO APPLICABLE PART NUMBER STANDARDS FOR MATERIAL, HEAT-TREAT, FINISH AND PLATING REQUIREMENTS.

c. INTENDED PURPOSE OF UNION ASSEMBLY IS FOR HIGH-PRESSURE FLUID CONNECTIONS IN ACCORDANCE WITH MIL-F-18280 SPECIFICATION.

MATERIAL:

ADD DD AFTER DASH NO. FOR ALUMINUM ALLOY
ADD T AFTER DASH NO. FOR TITANIUM ALLOY
ADD C AFTER DASH NO. FOR CORROSION-RESISTANT STEEL

EXAMPLE OF CODE:

VSF2000-8DD = UNION ASSEMBLY - ALUMINUM ALLOY, FOR USE WITH 1/2 O.D. TUBING; COMPRISING VSF1000-8DD NUT - ALUMINUM ALLOY, VSF1001-8DD COUPLING - ALUMINUM ALLOY, VSF1002-8DD INSERT - ALUMINUM ALLOY AND TWO MS21922-8 SLEEVES.

DIMENSIONS IN INCHES

PATENT PENDING

APPROVED DATE	TITLE	STANDARD
5 February 1959	UNION ASSEMBLY	VSF 2000
LATEST REVISION DATE	FLARELESS	
22 September 1959	SCOTT CONNECTOR SYSTEM	SHEET 1 OF 1

VOI-SHAN MANUFACTURING COMPANY
A DIVISION OF VOI-SHAN INDUSTRIES, INC.

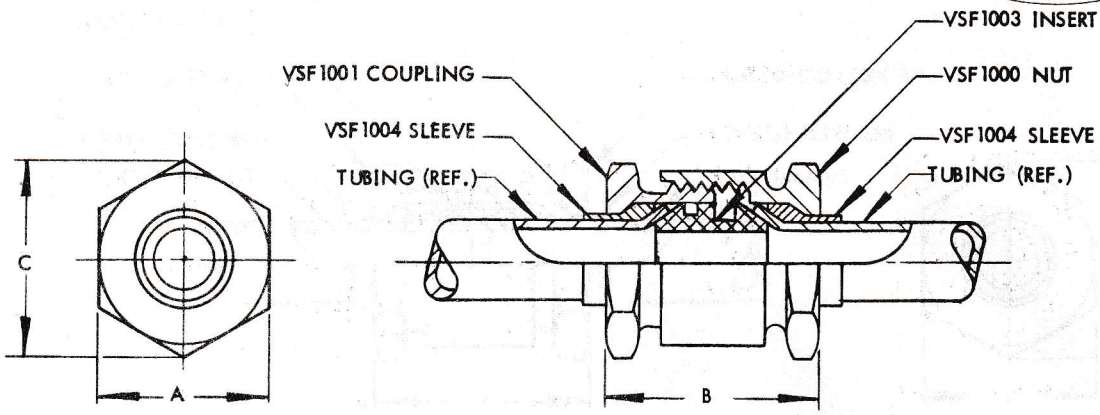

DASH NO.	TUBING SIZE O.D.(REF)	A HEX. FLATS (REF.)	B ASSY. LENGTH (NOTE a)	C HEX. CORNERS (REF.)
- 4	1/4	.688	1.239	.794
- 5	5/16	.750	1.269	.866
- 6	3/8	.875	1.357	1.010
- 8	1/2	1.000	1.413	1.155
-10	5/8	1.125	1.518	1.299
-12	3/4	1.312	1.575	1.516
-16	1	1.562	1.645	1.804
-20	1-1/4	1.875	1.710	2.165
-24	1-1/2	2.125	1.760	2.454
-28	1-3/4	2.500	1.806	2.887
-32	2	2.750	1.806	3.175
-40	2-1/2	3.250	1.821	3.753
-48	3	3.750	1.837	4.330

NOTES:

1. FLARE TUBING IN ACCORDANCE WITH VOI-SHAN SPECIFICATION VS-VSF-6-2.
2. NORMAL TIGHTENING VALUES OF THE VSF1000 NUT ARE 1/6th TURN (1- HEX. FLAT) MINIMUM TO 1/3rd TURN (2-HEX. FLATS) MAXIMUM PAST THE POINT OF SHARP TORQUE RISE ON ALL SIZES AND ALL TYPES OF TUBE AND FITTING MATERIALS.

ENGINEERING INFORMATION:

a. ASSEMBLED LENGTHS REFLECT AVERAGE DIMENSIONS AND WILL VARY UPON CHANGE OF TUBE WALL THICKNESS AND MATERIAL FOR A GIVEN SIZE. NOT TO BE USED AS AN INSPECTION STANDARD.

b. REFER TO APPLICABLE PART NUMBER STANDARDS FOR MATERIAL, HEAT-TREAT, FINISH AND PLATING REQUIREMENTS.

c. INTENDED PURPOSE OF UNION ASSEMBLY IS FOR HIGH-PRESSURE FLUID CONNECTIONS IN ACCORDANCE WITH MIL-F-18280 AND MIL-F-5509 SPECIFICATIONS.

MATERIAL:
ADD DD AFTER DASH NO. FOR ALUMINUM ALLOY
ADD T AFTER DASH NO. FOR TITANIUM ALLOY
ADD C AFTER DASH NO. FOR CORROSION-RESISTANT STEEL

TUBE WALL THICKNESS:
ADD A AFTER BASIC NO. FOR LONG TYPE INSERT USED WITH TUBE WALL THICKNESS .010 TO .034
ADD B AFTER BASIC NO. FOR MEDIUM TYPE INSERT USED WITH TUBE WALL THICKNESS .035 TO .057
ADD C AFTER BASIC NO. FOR SHORT TYPE INSERT USED WITH TUBE WALL THICKNESS .058 TO .083

EXAMPLE OF CODE:
VSF2001B6DD = UNION ASSEMBLY - ALUMINUM ALLOY, FOR USE WITH 3/8 O.D. TUBING (.035 TO .057WALL) COMPRISING VSF1000-6DD NUT - ALUMINUM ALLOY, VSF1001-6DD COUPLING - ALUMINUM ALLOY TWO VSF1004-6DD SLEEVE ALUMINUM ALLOY AND VSF1003B6DD INSERT, MEDIUM TYPE - ALUMINUM ALLOY

DIMENSIONS IN INCHES

PATENT PENDING

APPROVED DATE	TITLE	STANDARD
16 March 1959	UNION ASSEMBLY	
LATEST REVISION DATE	FLARED	VSF 2001
	SCOTT CONNECTOR SYSTEM	SHEET 1 OF 1

VOI-SHAN MANUFACTURING COMPANY
A DIVISION OF VOI-SHAN INDUSTRIES, INC.

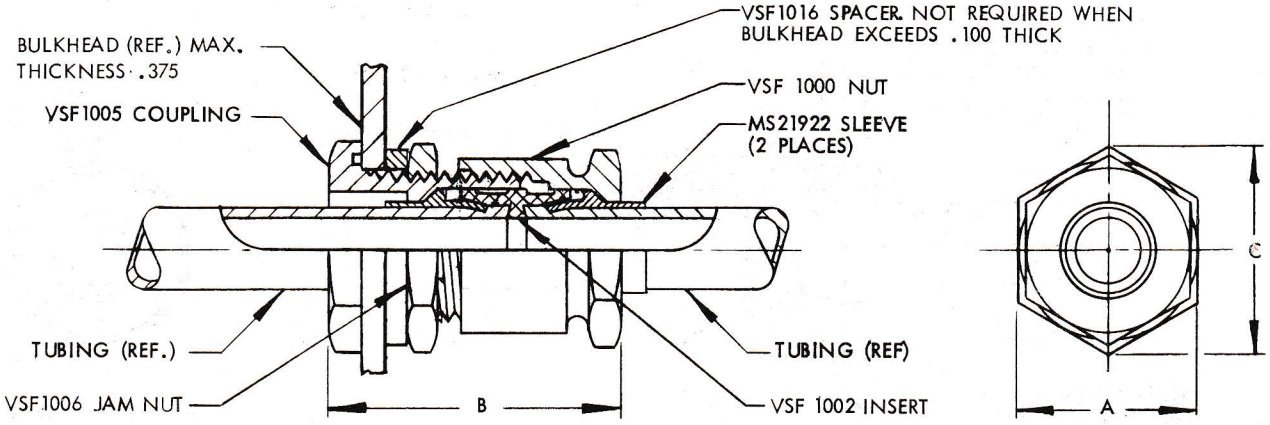

DASH NO.	TUBING SIZE O.D. (REF)	A HEX. FLATS (REF)	B ASSY. LENGTH (NOTE a)	C HEX. CORNERS (REF.)	BULKHEAD HOLE DIA. +.010 -.000
- 4	1/4	.812	1.739	.938	.567
- 5	5/16	.875	1.769	1.010	.630
- 6	3/8	1.000	1.857	1.155	.755
- 8	1/2	1.125	1.913	1.300	.880
-10	5/8	1.250	2.096	1.443	1.005
-12	3/4	1.437	2.153	1.660	1.192
-16	1	1.812	2.223	2.093	1.445
-20	1-1/4	2.125	2.288	2.453	1.758
-24	1-1/2	2.375	2.338	2.742	2.008
-32	2	3.000	2.384	3.464	2.633

NOTES:

1. MS21922 SLEEVE TO BE PRE-SET ON TUBING IN ACCORDANCE WITH VOI-SHAN SPECIFICATION VS-VSF-6-1.
2. NORMAL TIGHTENING VALUES OF THE VSF1000 NUT ARE 1/6th TURN (1-HEX.FLAT) MINIMUM TO 1/3rd TURN (2-HEX.FLATS) MAXIMUM PAST THE POINT OF SHARP TORQUE RISE ON ALL SIZES AND ALL TYPES OF TUBE AND FITTING MATERIALS.

ENGINEERING INFORMATION:

a. ASSEMBLED LENGTHS REFLECT AVERAGE DIMENSIONS AND WILL VARY UPON CHANGE OF TUBE WALL THICKNESS AND MATERIAL FOR A GIVEN SIZE. NOT TO BE USED AS AN INSPECTION STANDARD.

b. REFER TO APPLICABLE PART NUMBER STANDARDS FOR MATERIAL, HEAT-TREAT, FINISH AND PLATING REQUIREMENTS.

c. INTENDED PURPOSE OF UNION ASSEMBLY IS FOR HIGH-PRESSURE FLUID CONNECTIONS IN ACCORDANCE WITH MIL-F-18280 SPECIFICATION.

MATERIAL:

ADD DD DASH NUMBER FOR ALUMINUM ALLOY.
ADD T AFTER DASH NUMBER FOR TITANIUM ALLOY.
ADD C AFTER DASH NUMBER FOR CORROSION RESISTANT STEEL.

EXAMPLE OF CODE:

VSF2002-8DD = UNION ASSEMBLY - ALUMINUM ALLOY, FOR USE WITH 1/2 O.D. TUBING, COMPRISING VSF1000-8DD NUT-ALUMINUM ALLOY, VSF1005-8DD COUPLING-ALUMINUM ALLOY, VSF1002-8DD INSERT-ALUMINUM ALLOY, VSF1006-8DD JAM NUT-ALUMINUM ALLOY, VSF1016-8DD SPACER - ALUMINUM ALLOY AND TWO MS21922-8 SLEEVES.

DIMESNIONS IN INCHES

PATENT PENDING

APPROVED DATE	TITLE	STANDARD
16 March 1959	UNION ASSEMBLY - BULKHEAD	
LATEST REVISION DATE	FLARELESS	VSF 2002
	SCOTT CONNECTOR SYSTEM	SHEET 1 OF 1

VOI-SHAN MANUFACTURING COMPANY
A DIVISION OF VOI-SHAN INDUSTRIES, INC.

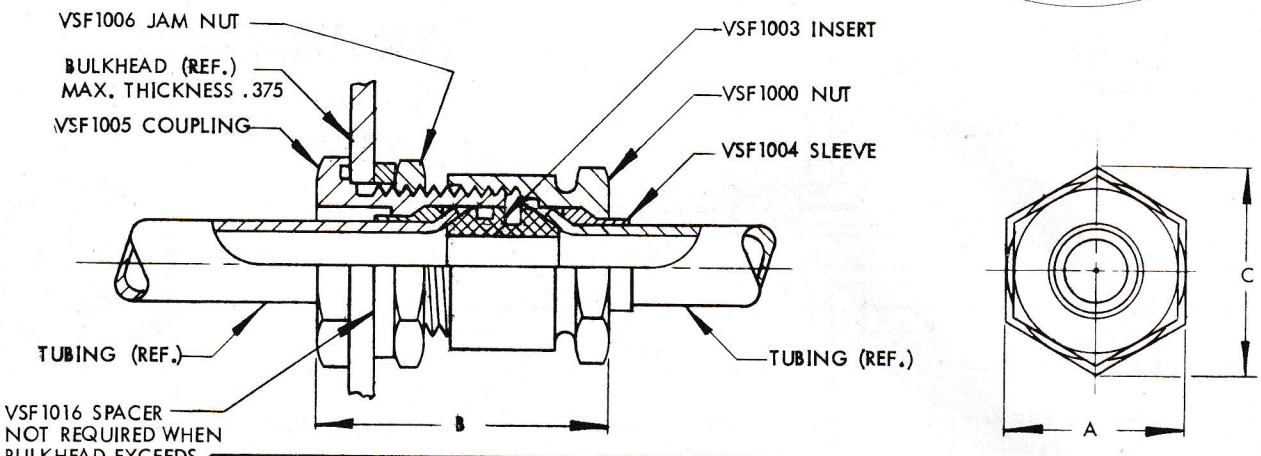

DASH NO.	TUBING SIZE O.D.(REF.)	A HEX. FLATS (REF.)	B ASSY. LENGTH (NOTE a)	C HEX. CORNERS (REF.)	BULKHEAD HOLE DIA. +.010 -.000
- 4	1/4	.812	1.739	.938	.567
- 5	5/16	.875	1.769	1.010	.630
- 6	3/8	1.000	1.857	1.155	.755
- 8	1/2	1.125	1.913	1.300	.880
-10	5/8	1.250	2.096	1.443	1.005
-12	3/4	1.437	2.096	1.660	1.192
-16	1	1.812	2.223	2.093	1.445
-20	1-1/4	2.125	2.288	2.453	1.758
-24	1-1/2	2.375	2.338	2.742	2.008
-28	1-3/4	2.750	2.384	3.175	2.383
-32	2	3.000	2.384	3.464	2.633
-40	2-1/2	3.625	2.400	4.186	3.135
-48	3	4.125	2.415	4.763	3.635

NOTES:

1. FLARE TUBING IN ACCORDANCE WITH VOI-SHAN SPECIFICATION VS-VSF-6-2
2. NORMAL TIGHTENING VALUES OF THE VSF1000 NUT ARE 1/6th TURN (1-HEX.FLAT) MINIMUM TO 1/3rd TURN (2-HEX.FLATS) MAXIMUM PAST THE POINT OF SHARP TORQUE RISE ON ALL SIZES AND ALL TYPES OF TUBE AND FITTING MATERIALS.

ENGINEERING INFORMATION:

a. ASSEMBLED LENGTHS REFLECT AVERAGE DIMENSIONS AND WILL VARY UPON CHANGE OF TUBE WALL THICKNESS AND MATERIAL FOR A GIVEN SIZE. NOT TO BE USED AS AN INSPECTION STANDARD.

b. REFER TO APPLICABLE PART NUMBER STANDARDS FOR MATERIAL, HEAT-TREAT, FINISH AND PLATING REQUIREMENTS.

c. INTENDED PURPOSE OF UNION ASSEMBLY IS FOR HIGH-PRESSURE FLUID CONNECTIONS IN ACCORDANCE WITH MIL-F-18280 AND MIL-F-5509 SPECIFICATIONS.

MATERIAL:
ADD DD AFTER DASH NO. FOR ALUMINUM ALLOY
ADD T AFTER DASH NO. FOR TITANIUM ALLOY
ADD C AFTER DASH NO. FOR CORROSION-RESISTANT STEEL

TUBE WALL THICKNESS:
ADD A AFTER BASIC NO. FOR LONG TYPE INSERT USED WITH TUBE WALL THICKNESS .010 TO .034.
ADD B AFTER BASIC NO. FOR MEDIUM TYPE INSERT USED WITH TUBE WALL THICKNESS .035 TO .057
ADD C AFTER BASIC NO. FOR SHORT TYPE INSERT USED WITH TUBE WALL THICKNESS .058 TO .083

EXAMPLE OF CODE:
VSF2003C8DD = UNION ASSEMBLY - ALUMINUM ALLOY, FOR USE WITH 1/2 O.D. TUBING (.058 TO .083 WALL) COMPRISING VSF1000-8DD NUT - ALUMINUM ALLOY, VSF1005-8DD COUPLING - ALUMINUM ALLOY, VSF1006 - 8DD JAM NUT - ALUMINUM ALLOY, VSF1003C8DD INSERT, SHORT TYPE - ALUMINUM ALLOY VSF1016 - 8DD SPACER - ALUMINUM ALLOY AND TWO VSF1004 -8DD SLEEVES - ALUMINUM ALLOY

DIMENSIONS IN INCHES

PATENT PENDING

APPROVED DATE	TITLE	STANDARD
16 March 1959	UNION ASSEMBLY - BULKHEAD FLARED SCOTT CONNECTOR SYSTEM	VSF 2003
LATEST REVISION DATE		SHEET 1 OF 1

VOI-SHAN MANUFACTURING COMPANY
A DIVISION OF VOI-SHAN INDUSTRIES, INC.

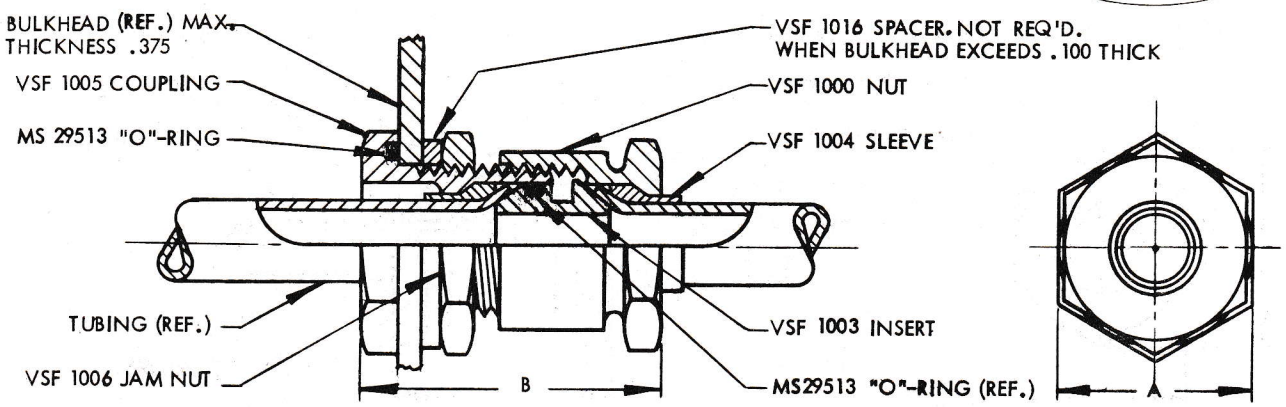

DASH NO.	TUBING SIZE O.D. (REF.)	A HEX. FLATS (REF.)	B ASSY. LENGTH (NOTE a)	MS29513 "O"-RING (REF.) DASH NO.		BULKHEAD HOLE DIA. +.010 -.000
				COUPLING	INSERT	
-4	1/4	.812	1.739	-15	-11	.567
-5	5/16	.875	1.769	-16	-12	.630
-6	3/8	1.000	1.857	-18	-14	.755
-8	1/2	1.125	1.913	-20	-15	.880
-10	5/8	1.250	2.096	-22	-17	1.005
-12	3/4	1.437	2.096	-25	-20	1.192
-16	1	1.812	2.223	-128	-24	1.445
-20	1-1/4	2.125	2.288	-133	-126	1.758
-24	1-1/2	2.375	2.338	-137	-130	2.008
-28	1-3/4	2.750	2.384	-143	-136	2.383
-32	2	3.000	2.384	-147	-140	2.633
-40	2-1/2	3.625	2.400	-235	-148	3.135
-48	3	4.125	2.415	-239	-235	3.635

NOTES:

1. FLARE TUBING IN ACCORDANCE WITH VOI-SHAN SPECIFICATION VS-VSF-6-2.
2. NORMAL TIGHTENING VALUES OF THE VSF 1000 NUT ARE 1/6th TURN (1-HEX. FLAT) MINIMUM TO 1/3rd TURN (2-HEX. FLATS) MAXIMUM PAST THE POINT OF SHARP TORQUE RISE ON ALL SIZES AND ALL TYPES OF TUBE AND FITTING MATERIALS.

ENGINEERING INFORMATION:

a. ASSEMBLED LENGTHS REFLECT AVERAGE DIMENSIONS AND WILL VARY UPON CHANGE OF TUBE WALL THICKNESS AND MATERIAL FOR A GIVEN SIZE. NOT TO BE USED AS AN INSPECTION STANDARD.
b. REFER TO APPLICABLE PART NUMBER STANDARDS FOR MATERIAL, HEAT-TREAT, FINISH AND PLATING REQUIREMENTS.
c. INTENDED PURPOSE OF UNION ASSEMBLY IS FOR HIGH-PRESSURE FLUID CONNECTIONS IN ACCORDANCE WITH MIL-F-5509 SPECIFICATION, PASSING INTO (OR THROUGH) LOW-PRESSURE STORAGE TANKS.

MATERIAL:

ADD DD AFTER DASH NO. FOR ALUMINUM ALLOY
ADD T AFTER DASH NO. FOR TITANIUM ALLOY
ADD C AFTER DASH NO. FOR CORROSION-RESISTANT STEEL

TUBE WALL THICKNESS:

ADD A AFTER BASIC NO. FOR LONG TYPE INSERT USED WITH TUBE WALL THICKNESS .010 TO .034
ADD B AFTER BASIC NO. FOR MEDIUM TYPE INSERT USED WITH TUBE WALL THICKNESS .035 TO .057
ADD C AFTER BASIC NO. FOR SHORT TYPE INSERT USED WITH TUBE WALL THICKNESS .058 TO .083

EXAMPLE OF CODE:

VSF 2004C8DD = UNION ASSEMBLY - ALUMINUM ALLOY, FOR USE WITH 1/2-O.D. TUBING (.058 TO .083 WALL) COMPRISING VSF 1000-8DD NUT - ALUMINUM ALLOY, VSF 1005-8DD COUPLING - ALUMINUM ALLOY, VSF 1006-8DD JAM NUT - ALUMINUM ALLOY, VSF 1003C8DD INSERT, SHORT TYPE - ALUMINUM ALLOY TWO VSF 1004-8DD SLEEVES - ALUMINUM ALLOY, VSF 1016-8DD SPACER - ALUMINUM ALLOY, MS29513-15 "O"-RING (REF.) AND MS29513-20 "O"-RING (REF.).

DIMENSIONS IN INCHES

PATENT PENDING

APPROVED DATE	TITLE	STANDARD
16 September 1959	UNION ASSEMBLY - BULKHEAD FUEL TANK SCOTT CONNECTOR SYSTEM	VSF 2004
LATEST REVISION DATE		SHEET 1 OF 1

VOI-SHAN MANUFACTURING COMPANY
A DIVISION OF VOI-SHAN INDUSTRIES, INC.

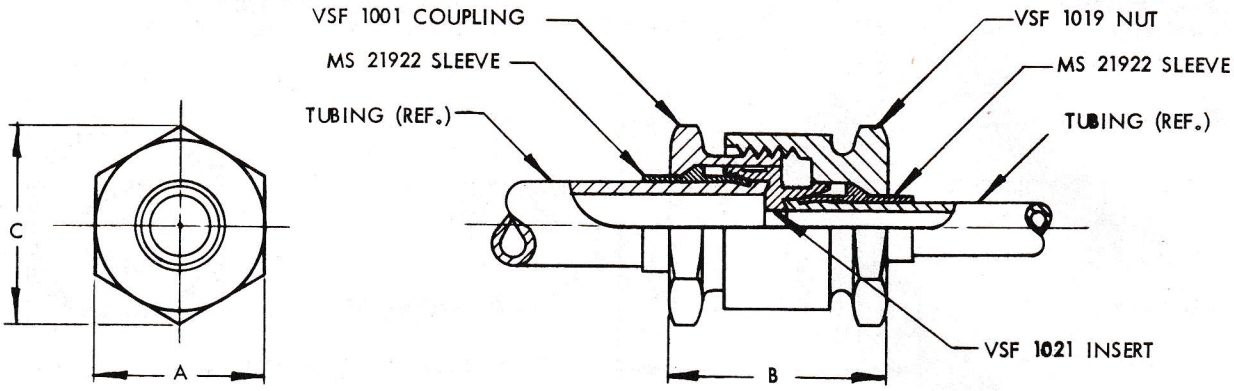

DASH NO.	TUBING (SIZE) O.D. (REF.)		A HEX. FLATS (REF.)	B ASSY. LENGTH (NOTE a)	C HEX. CORNERS (REF.)
	LARGE	SMALL			
5-4	5/16	1/4	.750	1.269	.866
6-4	3/8	1/4	.875	1.357	1.010
6-5	3/8	5/16	.875	1.357	1.010
8-4	1/2	1/4	1.000	1.413	1.155
8-5	1/2	5/16	1.000	1.413	1.155
8-6	1/2	3/8	1.000	1.413	1.155
10-5	5/8	5/16	1.125	1.518	1.300
10-6	5/8	3/8	1.125	1.518	1.300
10-8	5/8	1/2	1.125	1.518	1.300
12-6	3/4	3/8	1.312	1.575	1.516
12-8	3/4	1/2	1.312	1.575	1.516
12-10	3/4	5/8	1.312	1.575	1.516

DASH NO.	TUBING SIZE O.D. (REF.)		A HEX. FLATS (REF.)	B ASSY. LENGTH (NOTE a)	C HEX. CORNERS (REF.)
	LARGE	SMALL			
16-8	1	1/2	1.562	1.645	1.804
16-10	1	5/8	1.562	1.645	1.804
16-12	1	3/4	1.562	1.645	1.804
20-10	1-1/4	5/8	1.875	1.710	2.165
20-12	1-1/4	3/4	1.875	1.710	2.165
20-16	1-1/4	1	1.875	1.710	2.165
24-12	1-1/2	3/4	2.125	1.760	2.454
24-16	1-1/2	1	2.125	1.760	2.454
24-20	1-1/2	1-1/4	2.125	1.760	2.454
32-16	2	1	2.750	1.806	3.175
32-20	2	1-1/4	2.750	1.806	3.175
32-24	2	1-1/2	2.750	1.806	3.175

NOTES:

1. MS 21922 SLEEVE TO BE PRE-SET ON TUBING IN ACCORDANCE WITH VOI-SHAN SPECIFICATION VS-VSF-6-1.
2. NORMAL TIGHTENING VALUES OF THE VSF 1019 NUT ARE 1/6th TURN (1-HEX FLAT) MINIMUM TO 1/3rd TURN (2 HEX. FLATS) MAXIMUM PAST THE POINT OF SHARP TORQUE RISE ON ALL SIZES AND ALL TYPES OF TUBE AND FITTING MATERIALS.

ENGINEERING INFORMATION:

a. ASSEMBLED LENGTHS REFLECT AVERAGE DIMENSIONS AND WILL VARY UPON CHANGE OF TUBE WALL THICKNESS AND MATERIAL FOR A GIVEN SIZE. NOT TO BE USED AS AN INSPECTION STANDARD.
b. REFER TO APPLICABLE PART NUMBER STANDARDS FOR MATERIAL, HEAT-TREAT, FINISH AND PLATING REQUIREMENTS.
c. INTENDED PURPOSE OF UNION ASSEMBLY IS FOR HIGH-PRESSURE FLUID CONNECTIONS IN ACCORDANCE WITH MIL-F-18280 SPECIFICATION.

MATERIAL:

ADD DD AFTER SECOND DASH NO. FOR ALUMINUM ALLOY
ADD T AFTER SECOND DASH NO. FOR TITANIUM ALLOY
ADD C AFTER SECOND DASH NO. FOR CORROSION-RESISTANT STEEL

EXAMPLE OF CODE:

VSF 2005-16-10C = UNION ASSEMBLY - CORROSION-RESISTANT STEEL, FOR REDUCING 1-O.D. TUBING TO 5/8 O.D. TUBING, COMPRISING: VSF 1001-16C COUPLING - CORROSION-RESISTANT STEEL, VSF 1019-16-10C NUT CORROSION-RESISTANT STEL, VSF 1021-16-10C INSERT-CORROSION-RESISTANT STEEL, MS 21922-16 SLEEVE (REF.) AND MS 21922 -10 SLEEVE (REF.)

DIMENSIONS IN INCHES

PATENT PENDING

APPROVED DATE	TITLE	STANDARD
26 January 1960	UNION ASSEMBLY FLARELESS, REDUCING SCOTT CONNECTOR SYSTEM	VSF 2005
LATEST REVISION DATE		SHEET 1 OF 1

VOI-SHAN MANUFACTURING COMPANY
A DIVISION OF VOI-SHAN INDUSTRIES, INC.

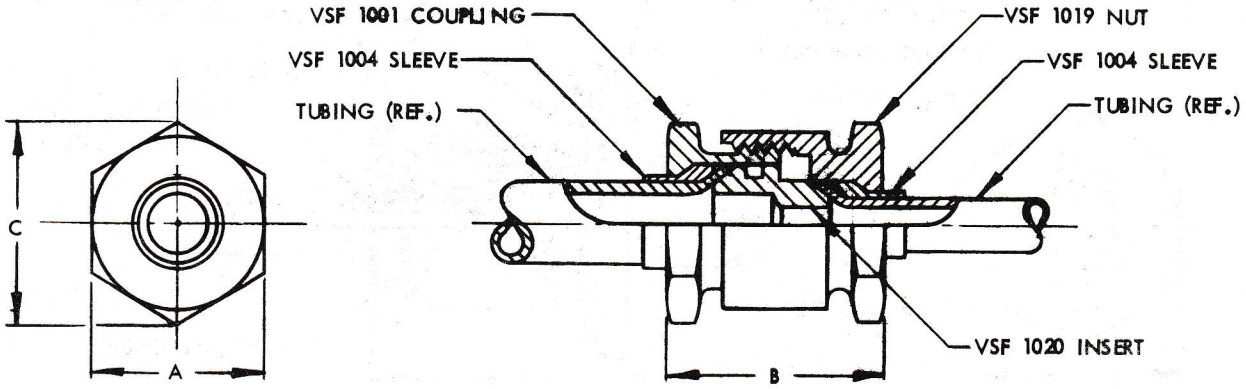

DASH NO.	TUBING SIZE O.D. (REF.) LARGE	TUBING SIZE O.D. (REF.) SMALL	A HEX. FLATS (REF.)	B ASSY. LENGTH (NOTE a)	C HEX. CORNERS (REF.)
5-4	5/16	1/4	.750	1.269	.866
6-4	3/8	1/4	.875	1.357	1.010
6-5	3/8	5/16	.875	1.357	1.010
8-4	1/2	1/4	1.000	1.413	1.155
8-5	1/2	5/16	1.000	1.413	1.155
8-6	1/2	3/8	1.000	1.413	1.155
10-5	5/8	5/16	1.125	1.518	1.300
10-6	5/8	3/8	1.125	1.518	1.300
10-8	5/8	1/2	1.125	1.518	1.300
12-6	3/4	3/8	1.312	1.575	1.516
12-8	3/4	1/2	1.312	1.575	1.516
12-10	3/4	5/8	1.312	1.575	1.516
16-8	1	1/2	1.562	1.645	1.804
16-10	1	5/8	1.562	1.645	1.804
16-12	1	3/4	1.562	1.645	1.804
20-10	1-1/4	5/8	1.875	1.710	2.165
20-12	1-1/4	3/4	1.875	1.710	2.165
20-16	1-1/4	1	1.875	1.710	2.165

DASH NO.	TUBING SIZE O.D. (REF.) LARGE	TUBING SIZE O.D. (REF.) SMALL	A HEX. FLATS (REF.)	B ASSY. LENGTH (NOTE a)	C HEX. CORNERS (REF.)
24-12	1-1/2	3/4	2.125	1.760	2.454
24-16	1-1/2	1	2.125	1.760	2.454
24-20	1-1/2	1-1/4	2.125	1.760	2.454
28-16	1-3/4	1	2.500	1.806	2.887
28-20	1-3/4	1-1/4	2.500	1.806	2.887
28-24	1-3/4	1-1/2	2.500	1.806	2.887
32-16	2	1	2.750	1.806	3.175
32-20	2	1-1/4	2.750	1.806	3.175
32-24	2	1-1/2	2.750	1.806	3.175
32-28	2	1-3/4	2.750	1.806	3.175
40-20	2-1/2	1-1/4	3.250	1.821	3.753
40-24	2-1/2	1-1/2	3.250	1.821	3.753
40-28	2-1/2	1-3/4	3.250	1.821	3.753
40-32	2-1/2	2	3.250	1.821	3.753
48-24	3	1-1/2	3.750	1.837	4.330
48-28	3	1-3/4	3.750	1.837	4.330
48-32	3	2	3.750	1.837	4.330
48-40	3	2-1/2	3.750	1.837	4.330

NOTES:
1. FLARE TUBING IN ACCORDANCE WITH VOI-SHAN SPECIFICATION VS-VSF-6-2.
2. NORMAL TIGHTENING VALUES OF THE VSF 1019 NUT ARE 1/6th TURN (1-HEX. FLAT) MINIMUM TO 1/3rd. TURN (2-HEX. FLATS) MAXIMUM PAST THE POINT OF SHARP TORQUE RISE ON ALL SIZES AND ALL TYPES OF TUBE AND FITTING MATERIALS.

ENGINEERING INFORMATION:
a. ASSEMBLED LENGTHS REFLECT AVERAGE DIMENSIONS AND WILL VARY UPON CHANGE OF TUBE WALL THICKNESS AND MATERIAL FOR A GIVEN SIZE. NOT TO BE USED AS AN INSPECTION STANDARD.
b. REFER TO APPLICABLE PART NUMBER STANDARDS FOR MATERIAL, HEAT-TREAT, FINISH AND PLATING REQUIREMENTS.
c. INTENDED PURPOSE OF UNION ASSEMBLY IS FOR HIGH-PRESSURE FLUID CONNECTIONS IN ACCORDANCE WITH MIL-F-18280 AND MIL-F-5509 SPECIFICATIONS.

MATERIAL:
ADD DD AFTER SECOND DASH NO. FOR ALUMINUM ALLOY.
ADD T AFTER SECOND DASH NO. FOR TITANIUM ALLOY.
ADD C AFTER SECOND DASH NO. FOR CORROSION-RESISTANT STEEL.

TUBE WALL THICKNESS:
ADD A AFTER BASIC NO. FOR LONG TYPE INSERT USED WITH TUBE WALL THICKNESS .010 TO .034.
ADD B AFTER BASIC NO. FOR MEDIUM TYPE INSERT USED WITH TUBE WALL THICKNESS .035 TO .057.
ADD C AFTER BASIC NO. FOR SHORT TYPE INSERT USED WITH TUBE WALL THICKNESS .058 TO .083.

EXAMPLE OF CODE:
VSF 2006 B 10-6DD = UNION ASSEMBLY, ALUMINUM ALLOY, FOR REDUCING 5/8 O.D. TUBING (.035 TO .057 WALL) TO 3/8 O.D. TUBING (.035 TO .057 WALL) COMPRISING: VSF 1001-10DD COUPLING ALUMINUM ALLOY, VSF 1019 - 10 - 6 DD NUT - ALUMINUM ALLOY, VSF 1020 B 10-6DD INSERT - ALUMINUM ALLOY, VSF 1004-10DD SLEEVE ALUMINUM ALLOY, AND VSF 1004 - 6DD SLEEVE - ALUMINUM ALLOY.

PATENT PENDING

APPROVED DATE	TITLE	STANDARD
25 January 1960	UNION ASSEMBLY	VSF 2006
LATEST REVISION DATE	FLARED, REDUCING	SHEET 1 OF 1
	SCOTT CONNECTOR SYSTEM	

VOI-SHAN MANUFACTURING COMPANY
A DIVISION OF VOI-SHAN INDUSTRIES, INC.

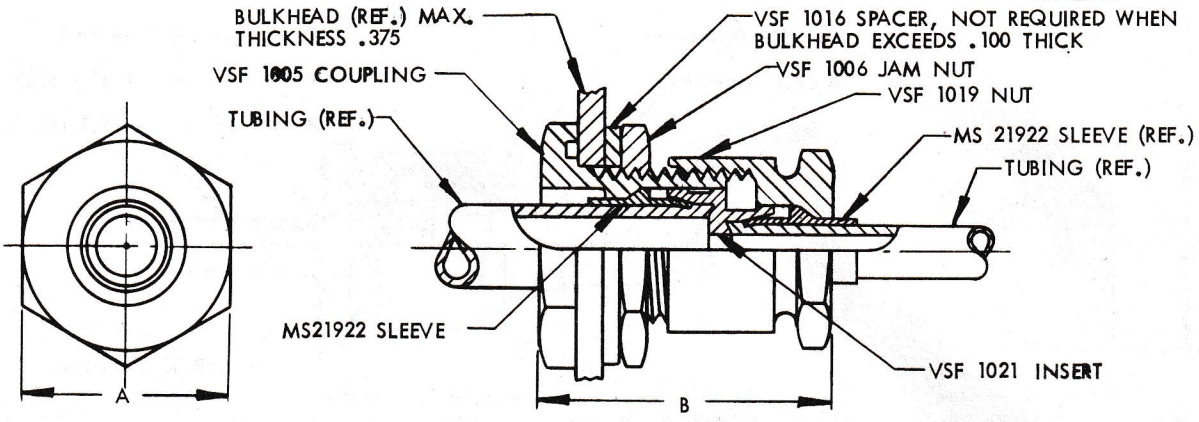

DASH NO.	TUBING SIZE O. D. (REF.) LARGE	TUBING SIZE O. D. (REF.) SMALL	A HEX. FLATS (REF.)	B ASSY. LENGTH (NOTE a)	BULKHEAD HOLE DIA. +.010 -.000
5-4	5/16	1/4	.875	1.769	.630
6-4	3/8	1/4	1.000	1.857	.755
6-5	3/8	5/16	1.000	1.857	.755
8-4	1/2	1/4	1.125	1.913	.880
8-5	1/2	5/16	1.125	1.913	.880
8-6	1/2	3/8	1.125	1.913	.880
10-5	5/8	5/16	1.250	2.096	1.005
10-6	5/8	3/8	1.250	2.096	1.005
10-8	5/8	1/2	1.250	2.096	1.005
12-6	3/4	3/8	1.437	2.096	1.192
12-8	3/4	1/2	1.437	2.096	1.192
12-10	3/4	5/8	1.437	2.096	1.192

DASH NO.	TUBING SIZE O.D. (REF.) LARGE	TUBING SIZE O.D. (REF.) SMALL	A HEX. FLATS (REF.)	B ASSY. LENGTH (NOTE a)	BULKHEAD HOLE DIA. +.010 -.000
16-8	1	1/2	1.812	2.223	1.445
16-10	1	5/8	1.812	2.223	1.445
16-12	1	3/4	1.812	2.223	1.445
20-10	1-1/4	5/8	2.125	2.288	1.758
20-12	1-1/4	3/4	2.125	2.288	1.758
20-16	1-1/4	1	2.125	2.288	1.758
24-12	1-1/2	3/4	2.375	2.338	2.008
24-16	1-1/2	1	2.375	2.338	2.008
24-20	1-1/2	1-1/4	2.375	2.338	2.008
32-16	2	1	3.000	2.384	2.633
32-20	2	1-1/4	3.000	2.384	2.633
32-24	2	1-1/2	3.000	2.384	2.633

NOTES:
1. MS 21922 SLEEVE TO BE PRE-SET ON TUBING IN ACCORDANCE WITH VOI-SHAN SPECIFICATION VS-VSF-6-1.
2. NORMAL TIGHTENING VALUES OF THE VSF 1019 NUT ARE 1/6th. TURN (1-HEX. FLAT) MINIMUM TO 1/3rd. TURN (2-HEX. FLATS) MAXIMUM PAST THE POINT OF SHARP TORQUE RISE ON ALL SIZES AND ALL TYPES OF TUBE AND FITTING MATERIALS.

ENGINEERING INFORMATION:
a. ASSEMBLED LENGTHS REFLECT AVERAGE DIMENSIONS AND WILL VARY UPON CHANGE OF TUBE WALL THICKNESS AND MATERIAL FOR A GIVEN SIZE. NOT TO BE USED AS AN INSPECTION STANDARD.
b. REFER TO APPLICABLE PART NUMBER STANDARDS FOR MATERIAL, HEAT-TREAT, FINISH AND PLATING REQUIREMENTS.
c. INTENDED PURPOSE OF UNION ASSEMBLY IS FOR HIGH-PRESSURE FLUID CONNECTIONS IN ACCORDANCE WITH MIL-F-18280 SPECIFICATION.

MATERIAL:
ADD DD AFTER SECOND DASH NUMBER FOR ALUMINUM ALLOY.
ADD T AFTER SECOND DASH NUMBER FOR TITANIUM ALLOY.
ADD C AFTER SECOND DASH NUMBER FOR CORROSION RESISTANT STEEL.

EXAMPLE OF CODE:
VSF 2007 - 32 - 20DD UNION ASSEMBLY-ALUMINUM ALLOY, FOR REDUCING 2-O.D. TUBING TO 1-1/4-O.D. TUBING, COMPRISING: VSF 1005 - 32DD COUPLING - ALUMINUM ALLOY, VSF 1006 - 32 DD JAM NUT - ALUMINUM ALLOY, VSF 1016 - 32DD SPACER - ALUMINUM ALLOY, VSF 1019 - 32 - 20DD NUT - ALUMINUM ALLOY, VSF 1021 - 32 - 20DD INSERT - ALUMINUM ALLOY, MS 21922 - 32 SLEEVE (REF.) AND MS 21922-20 SLEEVE (REF.)

DIMENSIONS IN INCHES

PATENT PENDING

APPROVED DATE	TITLE	STANDARD
26 January 1960	UNION ASSEMBLY - BULKHEAD	VSF 2007
LATEST REVISION DATE	FLARELESS, REDUCING	SHEET 1 OF 1
	SCOTT CONNECTOR SYSTEM	

VOI-SHAN MANUFACTURING COMPANY
A DIVISION OF VOI-SHAN INDUSTRIES, INC.

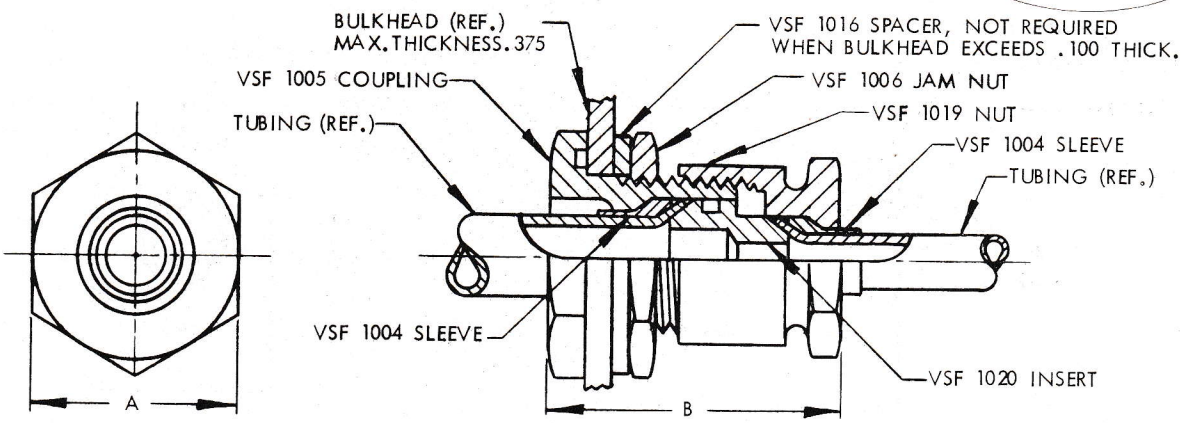

DASH NO.	TUBING SIZE O.D. (REF.)		A HEX. FLATS	B ASSY. LENGTH	BULKHEAD HOLE DIA. +.010 -.000
	LARGE	SMALL	(REF.)	(NOTE a)	
5-4	5/16	1/4	.875	1.769	.630
6-4	3/8	1/4	1.000	1.857	.755
6-5	3/8	5/16	1.000	1.857	.755
8-4	1/2	1/4	1.125	1.913	.880
8-5	1/2	5/16	1.125	1.913	.880
8-6	1/2	3/8	1.125	1.913	.880
10-5	5/8	5/16	1.250	2.096	1.005
10-6	5/8	3/8	1.250	2.096	1.005
10-8	5/8	1/2	1.250	2.096	1.005
12-6	3/4	3/8	1.437	2.096	1.192
12-8	3/4	1/2	1.437	2.096	1.192
12-10	3/4	5/8	1.437	2.096	1.192
16-8	1	1/2	1.812	2.223	1.445
16-10	1	5/8	1.812	2.223	1.445
16-12	1	3/4	1.812	2.223	1.445
20-10	1-1/4	5/8	2.125	2.288	1.758
20-12	1-1/4	3/4	2.125	2.288	1.758
20-16	1-1/4	1	2.125	2.288	1.758

DASH NO.	TUBING SIZE O.D. (REF.)		A HEX. FLATS	B ASSY. LENGTH	BULKHEAD HOLE DIA. +.010 -.000
	LARGE	SMALL	(REF.)	(NOTE a)	
24-12	1-1/2	3/4	2.375	2.338	2.008
24-16	1-1/2	1	2.375	2.338	2.008
24-20	1-1/2	1-1/4	2.375	2.338	2.008
28-16	1-3/4	1	2.750	2.384	2.383
28-20	1-3/4	1-1/4	2.750	2.384	2.383
28-24	1-3/4	1-1/2	2.750	2.384	2.383
32-16	2	1	3.000	2.384	2.633
32-20	2	1-1/4	3.000	2.384	2.633
32-24	2	1-1/2	3.000	2.384	2.633
32-28	2	1-3/4	3.000	2.384	2.633
40-20	2-1/2	1-1/4	3.625	2.400	3.135
40-24	2-1/2	1-1/2	3.625	2.400	3.135
40-28	2-1/2	1-3/4	3.625	2.400	3.135
40-32	2-1/2	2	3.625	2.400	3.135
48-24	3	1-1/2	4.125	2.415	3.635
48-28	3	1-3/4	4.125	2.415	3.635
48-32	3	2	4.125	2.415	3.635
48-40	3	2-1/2	4.125	2.415	3.635

NOTES:
1. FLARE TUBING IN ACCORDANCE WITH VOI-SHAN SPECIFICATION VS-VSF-6-2.
2. NORMAL TIGHTENING VALUES OF THE VSF 1019 NUT ARE 1/6th TURN (1-HEX. FLAT) MINIMUM TO 1/3rd. TURN (2-HEX. FLATS) MAXIMUM PAST THE POINT OF SHARP TORQUE RISE ON ALL SIZES AND ALL TYPES OF TUBE AND FITTING MATERIALS.

ENGINEERING INFORMATION:
a. ASSEMBLED LENGTHS REFLECT AVERAGE DIMENSIONS AND WILL VARY UPON CHANGE OF TUBE WALL THICKNESS AND MATERIAL FOR A GIVEN SIZE. NOT TO BE USED AS AN INSPECTION STANDARD.
b. REFER TO APPLICABLE PART NUMBER STANDARDS FOR MATERIAL, HEAT-TREAT, FINISH AND PLATING REQUIREMENTS.
c. INTENDED PURPOSE OF UNION ASSEMBLY IS FOR HIGH-PRESSURE FLUID CONNECTIONS IN ACCORDANCE WITH MIL-F-18280 AND MIL-F-5509 SPECIFICATIONS.

MATERIAL:
ADD DD AFTER SECOND DASH NO. FOR ALUMINUM ALLOY.
ADD T AFTER SECOND DASH NO. FOR TITANIUM ALLOY.
ADD C AFTER SECOND DASH NO. FOR CORROSION-RESISTANT STEEL.

TUBE WALL THICKNESS:
ADD A AFTER BASIC NO. FOR LONG TYPE INSERT USED WITH TUBE WALL THICKNESS .010 TO .034.
ADD B AFTER BASIC NO. FOR MEDIUM TYPE INSERT USED WITH TUBE WALL THICKNESS .035 TO .057.
ADD C AFTER BASIC NO. FOR SHORT TYPE INSERT USED WITH TUBE WALL THICKNESS .058 TO .083.

EXAMPLE OF CODE:
VSF 2008 C6-4T = UNION ASSEMBLY, TITANIUM ALLOY, FOR REDUCING 3/8 O.D. TUBING (.058 TO .083 WALL) TO 1/4 O.D. TUBING (.058 TO .083 WALL) COMPRISING: VSF 1005-6T COUPLING - TITANIUM ALLOY, VSF 1019 -6 -4T NUT - TITANIUM ALLOY, VSF 1020 C6 -4T INSERT - TITANIUM ALLOY, VSF 1004 - 6T SLEEVE - TITANIUM ALLOY - VSF 1004 - 4T SLEEVE - TITANIUM ALLOY, VSF 1006 - 6T JAM NUT - TITANIUM ALLOY AND VSF 1016 -6T SPACER - TITANIUM ALLOY

PATENT PENDING

APPROVED DATE	TITLE	STANDARD
26 January 1960	UNION ASSEMBLY - BULKHEAD	
LATEST REVISION DATE	FLARED, REDUCING	VSF2008
	SCOTT CONNECTOR SYSTEM	SHEET 1 OF 1

VOI-SHAN MANUFACTURING COMPANY
A DIVISION OF VOI-SHAN INDUSTRIES, INC.

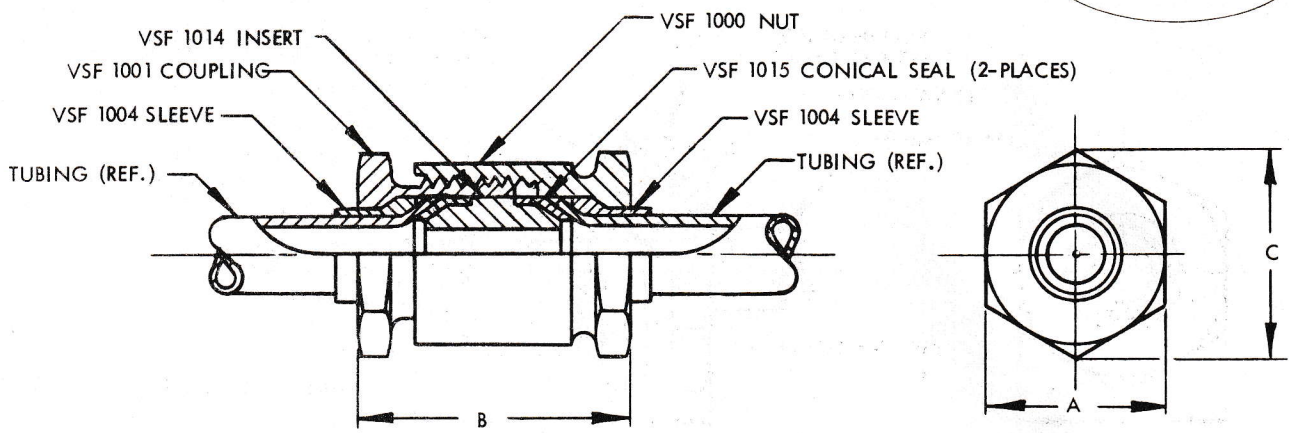

DASH NO.	TUBING SIZE O.D.(REF.)	A HEX. FLATS (REF.)	B ASSY. LENGTH (NOTE a)	C HEX. CORNERS (REF.)
-4	1/4	.688	1.239	.794
-5	5/16	.750	1.269	.866
-6	3/8	.875	1.357	1.010
-8	1/2	1.000	1.413	1.155
-10	5/8	1.125	1.518	1.299
-12	3/4	1.312	1.575	1.516
-16	1	1.562	1.645	1.804
-20	1-1/4	1.875	1.710	2.165
-24	1-1/2	2.125	1.760	2.454
-28	1-3/4	2.500	1.806	2.887
-32	2	2.750	1.806	3.175
-40	2-1/2	3.250	1.821	3.753
-48	3	3.750	1.837	4.330

NOTES:

1. FLARE TUBING IN ACCORDANCE WITH VOI-SHAN SPECIFICATION VS-VSF-6-2.
2. NORMAL TIGHTENING VALUES OF THE VSF 1000 NUT ARE 1/6th TURN (1-HEX. FLAT) MINIMUM TO 1/3rd TURN (2-HEX. FLATS) MAXIMUM PAST THE POINT OF SHARP TORQUE RISE ON ALL SIZES AND ALL TYPES OF TUBE AND FITTING MATERIALS.

ENGINEERING INFORMATION:

a. ASSEMBLED LENGTHS REFLECT AVERAGE DIMENSIONS AND WILL VARY UPON CHANGE OF TUBE WALL THICKNESS AND MATERIAL FOR A GIVEN SIZE. NOT TO BE USED AS AN INSPECTION STANDARD.

b. REFER TO APPLICABLE PART NUMBER STANDARDS FOR MATERIAL, HEAT-TREAT, FINISH AND PLATING REQUIREMENTS.

c. INTENDED PURPOSE OF UNION ASSEMBLY IS FOR HIGH-PRESSURE FLUID CONNECTIONS IN ACCORDANCE WITH MIL-F-18280 AND MIL-F-5509 SPECIFICATIONS.

MATERIAL:

ADD DD AFTER DASH NO. FOR ALUMINUM ALLOY
ADD T AFTER DASH NO. FOR TITANIUM ALLOY
ADD C AFTER DASH NO. FOR CORROSION-RESISTANT STEEL

TUBE WALL THICKNESS:

ADD A AFTER BASIC NO. FOR LONG TYPE INSERT USED WITH TUBE WALL THICKNESS.010 TO .034
ADD B AFTER BASIC NO. FOR MEDIUM TYPE INSERT USED WITH TUBE WALL THICKNESS .035 TO .057.
ADD C AFTER BASIC NO. FOR SHORT TYPE INSERT USED WITH TUBE WALL THICKNESS .058 TO .083.

EXAMPLE OF CODE:

VSF 2009B6DD = UNION ASSEMBLY - ALUMINUM ALLOY, FOR USE WITH 3/8 O.D. TUBING (.035 TO .057 WALL) COMPRISING VSF 1000-6DD NUT - ALUMINUM ALLOY, VSF 1001-6DD COUPLING - ALUMINUM ALLOY TWO VSF 1004-6DD SLEEVE ALUMINUM ALLOY; VSF 1014B6DD INSERT - ALUMINUM ALLOY AND TWO VSF 1015-6 CONICAL SEALS.

DIMENSIONS IN INCHES

PATENT PENDING

APPROVED DATE	TITLE	STANDARD
17 November 1959	UNION ASSEMBLY	VSF 2009
LATEST REVISION DATE	FLARED - CONICAL SEAL	SHEET 1 OF 1
	SCOTT CONNECTOR SYSTEM	

VOI-SHAN MANUFACTURING COMPANY
A DIVISION OF VOI-SHAN INDUSTRIES, INC.

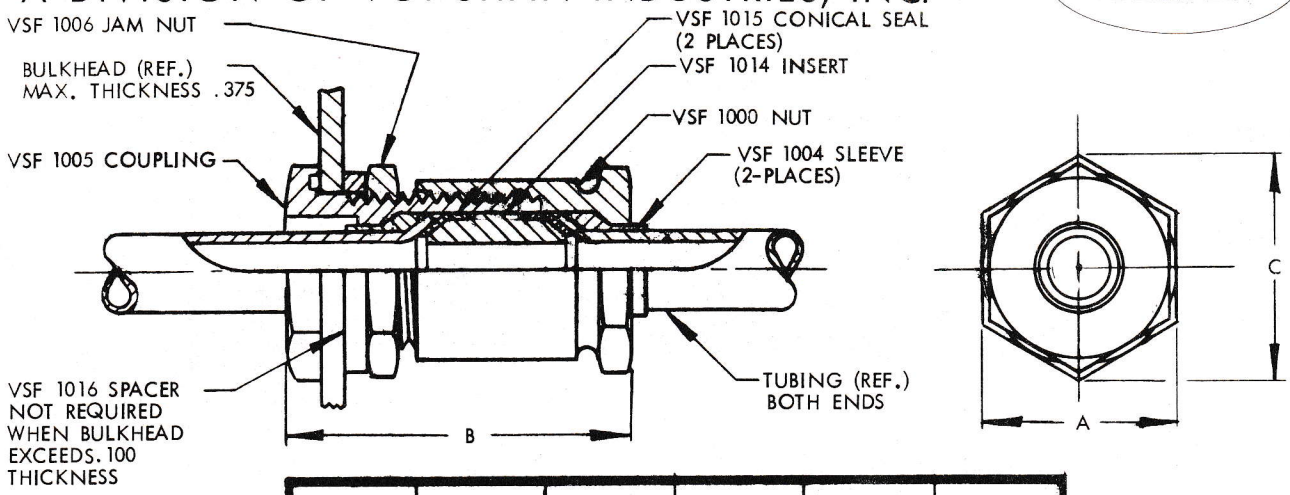

DASH NO.	TUBING SIZE O.D. (REF.)	A HEX. FLATS (REF.)	B ASSY. LENGTH (NOTE a)	C HEX. CORNERS (REF.)	BULKHEAD HOLE DIA. +.010 -.000
-4	1/4	.812	1.739	.938	.567
-5	5/16	.875	1.769	1.010	.630
-6	3/8	1.000	1.857	1.155	.755
-8	1/2	1.125	1.913	1.300	.880
-10	5/8	1.250	2.096	1.443	1.005
-12	3/4	1.437	2.096	1.660	1.192
-16	1	1.812	2.223	2.093	1.445
-20	1-1/4	2.125	2.288	2.453	1.758
-24	1-1/2	2.375	2.338	2.742	2.008
-28	1-3/4	2.750	2.384	3.175	2.383
-32	2	3.000	2.384	3.464	2.633
-40	2-1/2	3.625	2.400	4.186	3.135
-48	3	4.125	2.415	4.763	3.635

NOTES:

1. FLARE TUBING IN ACCORDANCE WITH VOI-SHAN SPECIFICATION ~~VS~~-VSF-6-2
2. NORMAL TIGHTENING VALUES OF THE VSF 1000 NUT ARE 1/6th TURN (1-HEX. FLAT) MINIMUM TO 1/3rd TURN (2-HEX. FLATS) MAXIMUM PAST THE POINT OF SHARP TORQUE RISE ON ALL SIZES AND ALL TYPES OF TUBE AND FITTING MATERIALS.

ENGINEERING INFORMATION:

a. ASSEMBLED LENGTHS REFLECT AVERAGE DIMENSIONS AND WILL VARY UPON CHANGE OF TUBE WALL THICKNESS AND MATERIAL FOR A GIVEN SIZE. NOT TO BE USED AS AN INSPECTION STANDARD.

b. REFER TO APPLICABLE PART NUMBER STANDARDS FOR MATERIAL, HEAT-TREAT, FINISH AND PLATING REQUIREMENTS.

c. INTENDED PURPOSE OF UNION ASSEMBLY IS FOR HIGH-PRESSURE FLUID CONNECTIONS IN ACCORDANCE WITH MIL-F-18280 AND MIL-F-5509 SPECIFICATIONS.

MATERIAL:
ADD DD AFTER DASH NO. FOR ALUMINUM ALLOY
ADD T AFTER DASH NO. FOR TITANIUM ALLOY
ADD C AFTER DASH NO. FOR CORROSION-RESISTANT STEEL

TUBE WALL THICKNESS:
ADD A AFTER BASIC NO. FOR LONG TYPE INSERT USED WITH TUBE WALL THICKNESS .010 TO .034.
ADD B AFTER BASIC NO. FOR MEDIUM TYPE INSERT USED WITH TUBE WALL THICKNESS .035 TO .057.
ADD C AFTER BASIC NO. FOR SHORT TYPE INSERT USED WITH TUBE WALL THICKNESS .058 TO .083.

EXAMPLE OF CODE:
VSF 2010C8DD = UNION ASSEMBLY - ALUMINUM ALLOY, FOR USE WITH 1/2 O.D. TUBING (.058 TO .083 WALL) COMPRISING VSF 1000-8DD NUT - ALUMINUM ALLOY, VSF 1005-8DD COUPLING - ALUMINUM ALLOY, VSF 1006 - 8DD JAM NUT - ALUMINUM ALLOY, VSF 1014C8DD INSERT, SHORT TYPE - ALUMINUM ALLOY VSF 1016 - 8DD SPACER - ALUMINUM ALLOY, TWO VSF 1004 -8DD SLEEVES - ALUMINUM ALLOY AND TWO VSF 1015 -8 CONICAL SEALS.

DIMENSIONS IN INCHES

PATENT PENDING

APPROVED DATE	TITLE	STANDARD
17 November 1959	UNION ASSEMBLY - BULKHEAD	VSF 2010
LATEST REVISION DATE	FLARED, CONICAL SEAL	SHEET 1 OF 1
	SCOTT CONNECTOR SYSTEM	

VOI-SHAN MANUFACTURING COMPANY
A DIVISION OF VOI-SHAN INDUSTRIES, INC.

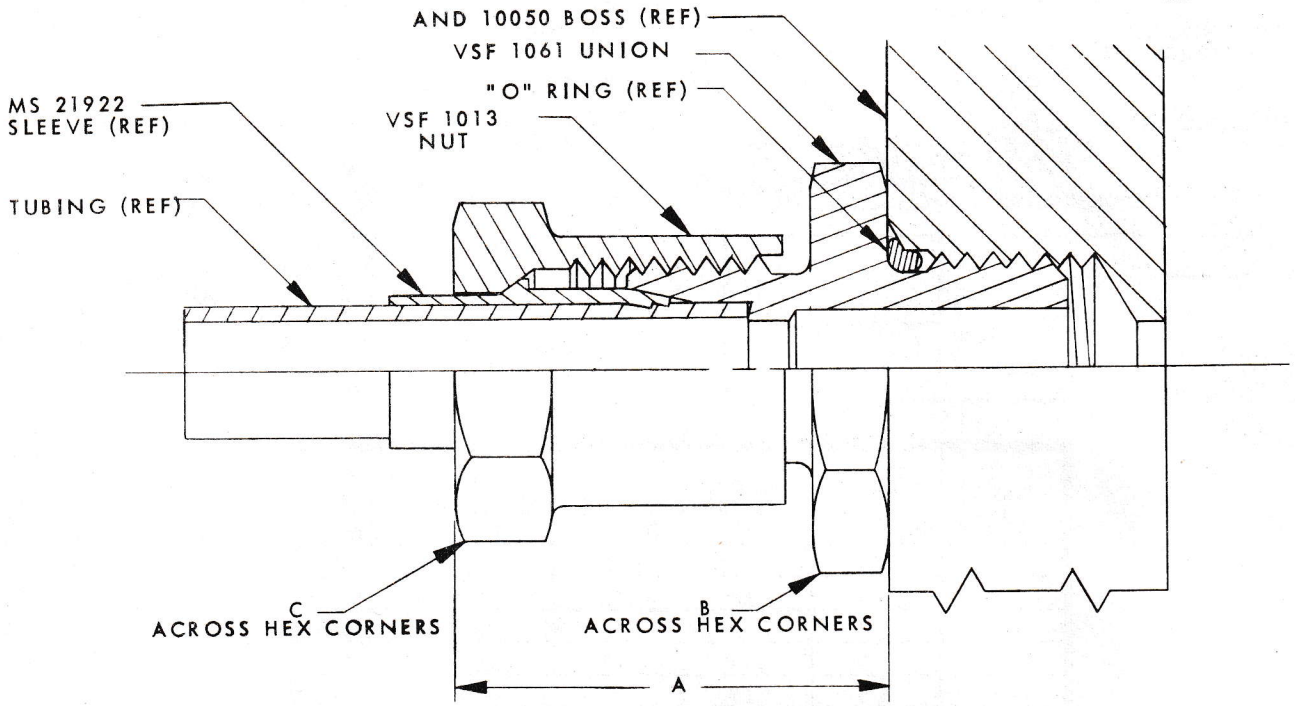

DASH NO.	TUBING SIZE O.D.(REF)	A ASSEMBLY LENGTH (a)	B HEX CORNERS (REF)	C HEX CORNERS (REF)
-4	1/4	.795	.793	.649
-5	5/16	.795	.865	.721
-6	3/8	.915	.938	.793
-8	1/2	.963	1.154	1.010
-10	5/8	1.023	1.299	1.154
-12	3/4	1.163	1.587	1.443
-16	1	1.140	1.876	1.732
-20	1-1/4	1.186	2.165	2.020
-24	1-1/2	1.235	2.453	2.309
-32	2	1.179	3.175	3.175

NOTES:

1. MS21922 SLEEVE TO BE PRE-SET ON TUBING IN ACCORDANCE WITH VOI-SHAN SPECIFICATION VS-VSF-6-1.
2. NORMAL TIGHTENING VALUES OF THE VSF 1013 NUT ARE 1/6th TURN (1-HEX. FLAT) MINIMUM TO 1/3rd TURN (2 HEX. FLATS) MAXIMUM PAST THE POINT OF SHARP TORQUE RISE ON ALL SIZES AND ALL TYPES OF TUBE AND FITTING MATERIALS.

ENGINEERING INFORMATION:

a. ASSEMBLED LENGTHS REFLECT AVERAGE DIMENSIONS AND WILL VARY UPON CHANGE OF TUBE WALL THICKNESS AND MATERIAL FOR A GIVEN SIZE. NOT TO BE USED AS AN INSPECTION STANDARD.

b. REFER TO APPLICABLE PART NUMBER STANDARDS FOR MATERIAL, HEAT-TREAT, FINISH AND PLATING REQUIREMENTS.

c. INTENDED PURPOSE OF BOSS UNION ASSEMBLY IS FOR HIGH-PRESSURE FLUID CONNECTIONS IN ACCORDANCE WITH MIL-F-18280 SPECIFICATION.

APPROVED DATE	TITLE	STANDARD
18 NOVEMBER 1960	BOSS UNION ASSEMBLY LIGHTWEIGHT, FLARELESS	VSF2011
LATEST REVISION DATE		SHEET 1 OF 1

VOI-SHAN MANUFACTURING COMPANY
A DIVISION OF VOI-SHAN INDUSTRIES, INC.

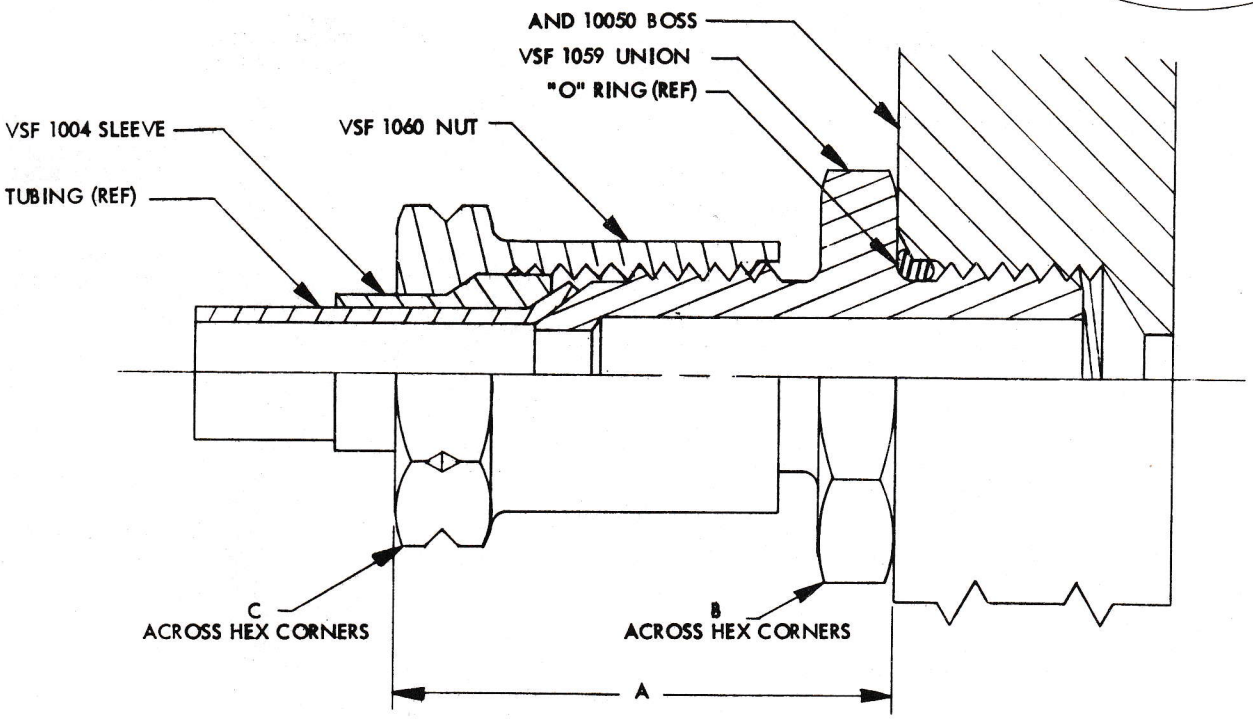

DASH NO.	TUBING SIZE O.D. (REF)	A ASSEMBLY LENGTH (a)	B HEX CORNERS (REF)	C HEX CORNERS (REF)
4	1/4	.843	.793	.649
5	5/16	.843	.865	.721
6	3/8	.843	.938	.793
8	1/2	.966	1.154	1.010
10	5/8	1.066	1.299	1.154
12	3/4	1.234	1.587	1.443
16	1	1.317	1.876	1.732
20	1-1/4	1.377	2.165	2.020
24	1-1/2	1.596	2.453	2.309
32	2	1.793	3.175	3.175

NOTES:

1. NORMAL TIGHTENING VALUES OF THE VSF 1060 NUT ARE 1/6th TURN (1-HEX. FLAT) MINIMUM TO 1/3rd TURN (2 HEX. FLATS) MAXIMUM PAST THE POINT OF SHARP TORQUE RISE ON ALL SIZES AND ALL TYPES OF TUBE AND FITTING MATERIALS.

ENGINEERING INFORMATION:

a. ASSEMBLED LENGTHS REFLECT AVERAGE DIMENSIONS AND WILL VARY UPON CHANGE OF TUBE WALL THICKNESS AND MATERIAL FOR A GIVEN SIZE. NOT TO BE USED AS AN INSPECTION STANDARD.

b. REFER TO APPLICABLE PART NUMBER STANDARDS FOR MATERIAL, HEAT-TREAT, FINISH AND PLATING REQUIREMENTS.

c. INTENDED PURPOSE OF BOSS UNION ASSEMBLY IS FOR HIGH-PRESSURE FLUID CONNECTIONS IN ACCORDANCE WITH MIL-F-18280 SPECIFICATION.

APPROVED DATE	TITLE	STANDARD
23 NOVEMBER 1960	BOSS UNION ASSEMBLY LIGHTWEIGHT, FLARED	VSF2012
LATEST REVISION DATE		SHEET OF

VOI-SHAN MANUFACTURING COMPANY
A DIVISION OF VOI-SHAN INDUSTRIES, INC.

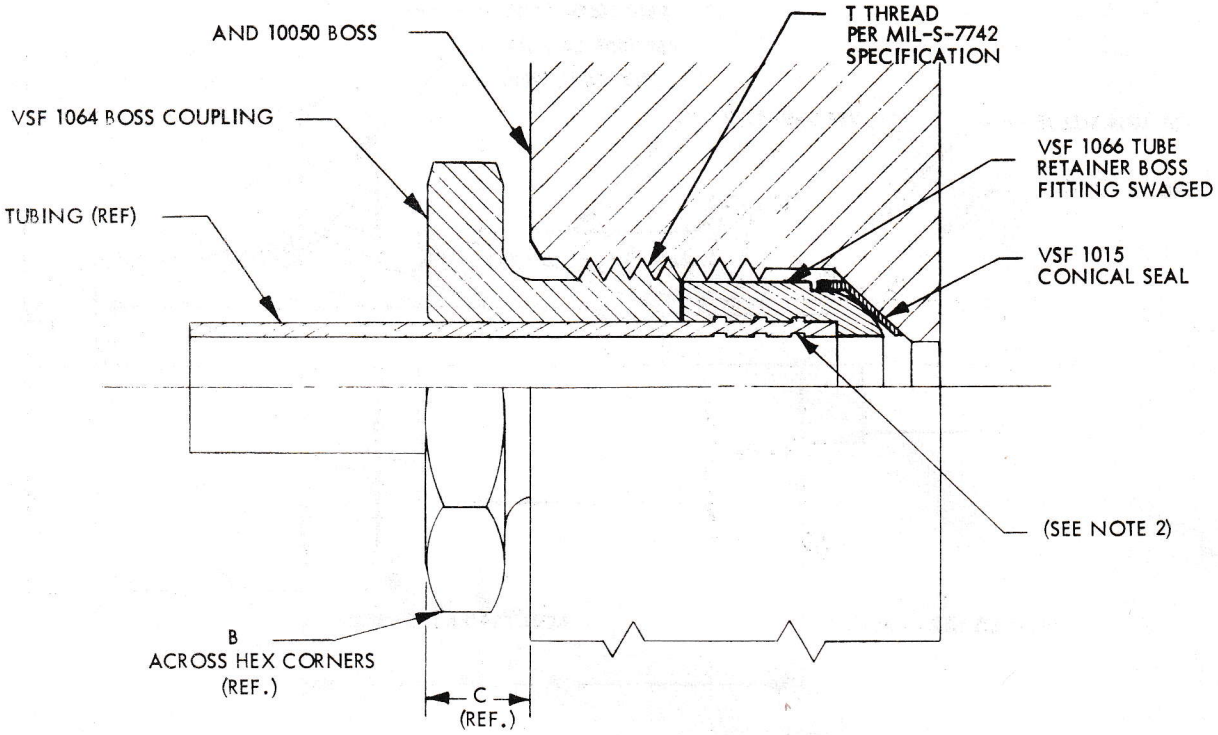

DASH NO.	TUBING O.D.	T THREAD	A HEX FLATS		B (REF.) HEX CORNERS	C (REF.)
4	.250	7/16-20UNF-3B	.688		.793	.212
5	.312	1/2-20UNF-3B	.750	+.003 -.004	.865	.212
6	.375	9/16-18UNF-3B	.813		.938	.249
8	.500	3/4-16UNF-3B	1.000		1.154	.280
10	.625	7/8-14UNF-3B	1.125		1.299	.280
12	.750	1-1/16-12UN-3B	1.375		1.587	.312
16	1.000	1-5/16-12UN-3B	1.625	±.016	1.876	.312
20	1.250	1-5/8-12UN-3B	1.875		2.165	.327
24	1.500	1-7/8-12N-3B	2.125		2.453	.327
28	1.750	2-1/4-12UN-3B	2.500	±.020	2.886	.343
32	2.000	2-1/2-12UN-3B	2.750		3.175	.343

NOTES:

1. TORQUE VALUES FOR THE VSF 2013 ASSEMBLY IN ACCORDANCE WITH VOI-SHAN SPECIFICATION VS-VSF-3-6.
2. ATTACHMENT OF TUBE TO RETAINER IN ACCORDANCE WITH AVICA CORPORATION STANDARD. QUALIFICATION OF METHOD PER AIR FORCE CONTRACT AF 33 (600) - 35992. (SEE VS-VSF-3-6)

ENGINEERING INFORMATION:

a. REFER TO APPLICABLE PART NUMBER STANDARDS FOR MATERIAL, HEAT-TREAT, FINISH AND PLATING REQUIREMENTS.
b. INTENDED PURPOSE OF BOSS UNION ASSEMBLY IS FOR HIGH-PRESSURE FLUID CONNECTIONS IN ACCORDANCE WITH MIL-F-5509 SPECIFICATION.

PATENT APPLIED FOR

APPROVED DATE	TITLE	STANDARD
16 MARCH 1961	BOSS UNION ASSEMBLY 360° ROTATION - SWAGED	VSF2013
LATEST REVISION DATE		SHEET 1 OF 1

VOI-SHAN MANUFACTURING COMPANY
A DIVISION OF VOI-SHAN INDUSTRIES, INC.

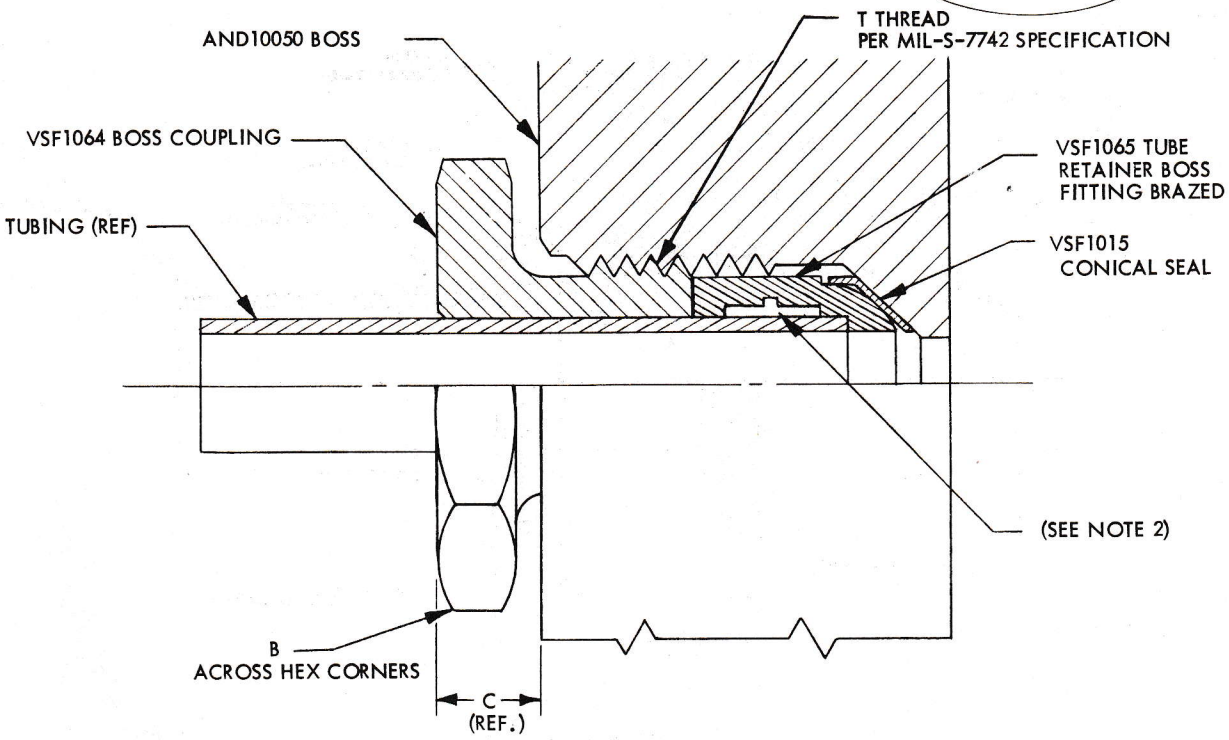

DASH NO.	TUBING O.D.	T THREAD	A HEX FLATS		B HEX CORNERS	C (REF.)
4	.250	7/16-20UNF-3B	.688	+.003 -.004	.793	.212
5	.312	1/2-20UNF-3B	.750		.865	.212
6	.375	9/16-18UNF-3B	.813		.938	.249
8	.500	3/4-16UNF-3B	1.000		1.154	.280
10	.625	7/8-14UNF-3B	1.125		1.299	.280
12	.750	1-1/16-12UN-3B	1.375		1.587	.312
16	1.000	1-5/16-12UN-3B	1.625	±.016	1.876	.312
20	1.250	1-5/8-12UN-3B	1.875		2.165	.327
24	1.500	1-7/8-12N-3B	2.125	±.020	2.453	.327
28	1.750	2-1/4-12UN-3B	2.500		2.886	.343
32	2.000	2-1/2-12UN-3B	2.750		3.175	.343

NOTES:

1. TORQUE VALUES FOR THE VSF 2014 ASSEMBLY IN ACCORDANCE WITH VOI-SHAN SPECIFICATION VS-VSF-3-6.
2. ATTACHMENT OF TUBE IN ACCORDANCE WITH VOI-SHAN SPECIFICATION VS-VSF-3-6.

ENGINEERING INFORMATION:

a. REFER TO APPLICABLE PART NUMBER STANDARDS FOR MATERIAL, HEAT-TREAT, FINISH AND PLATING REQ'MTS.
b. INTENDED PURPOSE OF BOSS UNION ASSEMBLY IS FOR HIGH-PRESSURE FLUID CONNECTIONS IN ACCORDANCE WITH MIL-F-5509 SPECIFICATION.

PATENT APPLIED FOR

APPROVED DATE	TITLE	STANDARD
17 MARCH 1961	BOSS UNION ASSEMBLY 360° ROTATION - BRAZED	VSF 2014
LATEST REVISION DATE		SHEET 1 OF 1

VOI-SHAN MANUFACTURING COMPANY
A DIVISION OF VOI-SHAN INDUSTRIES, INC.

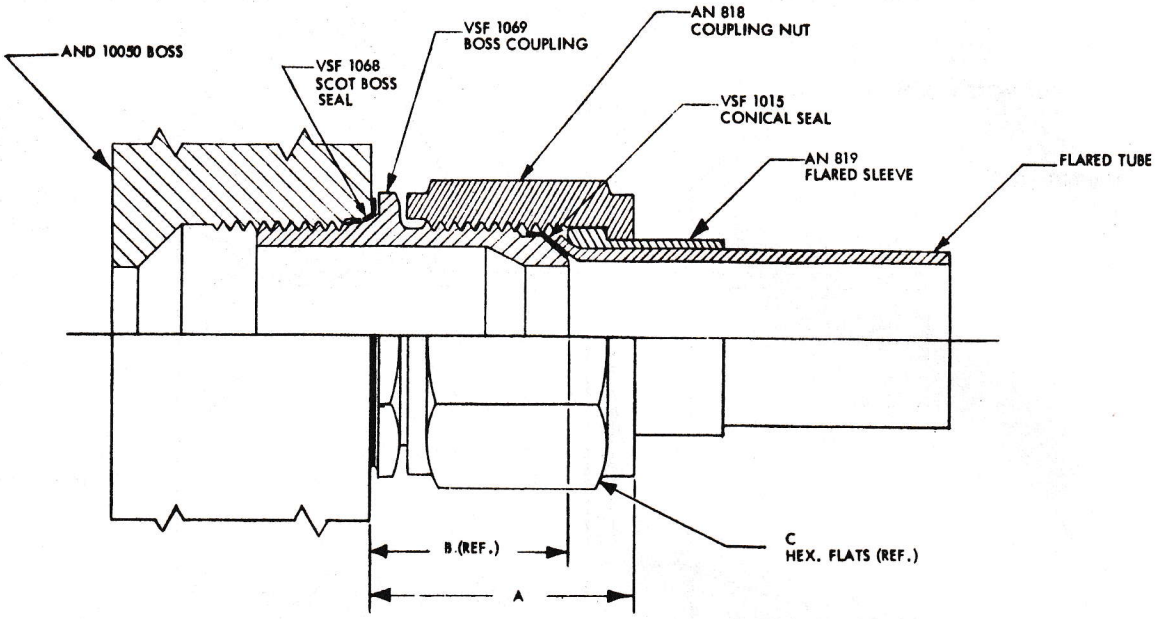

ASSEMBLY NOMENCLATURE

TUBING O.D.	T THREAD	A ASSEMBLY LENGTH (a)	AND 10050 DASH NO.	VSF 1068 DASH NO.	VSF 1069 DASH NO.	AN 818 DASH NO.	VSF 1015 DASH NO.	AN 819 DASH NO.	B (REF.)	C HEX. FLATS (REF.)	
1/8	5/16 - 24 UNF-3B	.742	2	2	2	2	2	2	.573	.375	
3/16	3/8 - 24 UNF-3B	.742	3	3	3	3	3	3	.604	.438	
1/4	7/16 - 20 UNF-3B	.843	4	4	4	4	4	4	.700	.563	
5/16	1/2 - 20 UNF-3B	.843	5	5	5	5	5	5	.700	.625	+.003
3/8	9/16 - 18 UNF-3B	.843	6	6	6	6	6	6	.743	.688	-.004
1/2	3/4 - 16 UNF-3B	.966	8	8	8	8	8	8	.875	.875	
5/8	7/8 - 14 UNF-3B	1.066	10	10	10	10	10	10	.976	1.000	
3/4	1 1/16 - 12 UN-3B	1.234	12	12	12	12	12	12	1.114	1.250	
1	1 5/16 - 12 UN-3B	1.317	16	16	16	16	16	16	1.161	1.500	
1 1/4	1 5/8 - 12 N-3B	1.337	20	20	20	20	20	20	1.223	2.000	±.016
1 1/2	1 7/8 - 12 N - 3B	1.596	24	24	24	24	24	24	1.348	2.250	
1 3/4	2 1/4 - 12 UN - 3B	1.692	28	28	28	28	28	28	1.489	2.625	±.020
2	2 1/2 - 12 UN - 3B	1.793	32	32	32	32	32	32	1.614	2.875	

NOTES:

1. USE SEAL COMPATABLE WITH SYSTEM FLUID.
2. INSPECT VSF 1069 HEX FLAT AREA TO SEE IF SEAL IS INSTALLED.
3. LUBRICATE THREADS WITH COMPATABLE SYSTEM FLUID.
4. TORQUE VALUES IN ACCORDANCE WITH VS-VS-6-3

ENGINEERING INFORMATION:

a. ASSEMBLED LENGTHS REFLECT AVERAGE DIMENSIONS AND WILL VARY UPON CHANGE OF TUBE WALL THICKNESS AND MATERIAL FOR A GIVEN SIZE. NOT TO BE USED AS AN INSPECTION STANDARD.

b. REFER TO APPLICABLE PART NUMBER STANDARDS FOR MATERIAL, HEAT-TREAT, FINISH AND PLATING REQUIREMENTS.

c. INTENDED PURPOSE OF BOSS UNION ASSEMBLY IS FOR HIGH-PRESSURE FLUID CONNECTIONS IN ACCORDANCE WITH MIL-F-5509 SPECIFICATION.

PATENT APPLIED FOR

APPROVED DATE	TITLE	CODE IDENT. NO.
30 APRIL 1962	BOSS, UNION ASSEMBLY	92215
LATEST REVISION DATE	"SCOTT BOSS" SEAL	STANDARD
		VSF 2015
		SHEET OF

VOI-SHAN MANUFACTURING COMPANY
A DIVISION OF VOI-SHAN INDUSTRIES, INC.

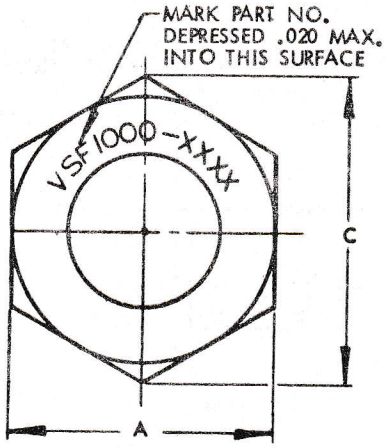

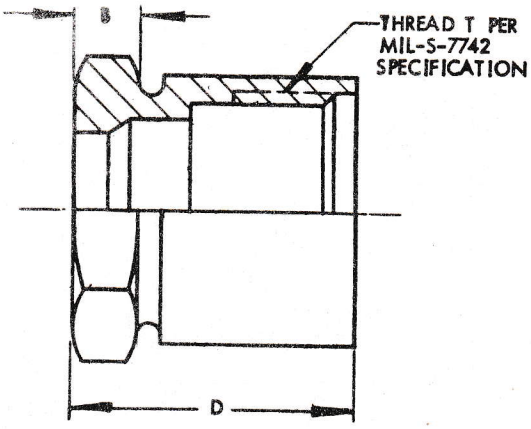

DASH NO.	TUBE SIZE O.D.	THREAD T (MIL-S-7742)	A HEX. FLATS		B ± .020	C (REF)	D ± .020
- 4	1/4	9/16-18UNF-3B	.688		.187	.794	.969
- 5	5/16	5/8-18UNF-3B	.750		.187	.866	1.000
- 6	3/8	3/4-16UNF-3B	.875	+.003	.187	1.010	1.077
- 8	1/2	7/8-14UNF-3B	1.000	-.004	.218	1.155	1.088
-10	5/8	1-12UNF-3B	1.125		.218	1.299	1.175
-12	3/4	1-3/16-12UN-3B	1.312		.250	1.516	1.200
-16	1	1-7/16-12UN-3B	1.562		.250	1.804	1.270
-20	1-1/4	1-3/4-12UN-3B	1.875	±.016	.265	2.165	1.320
-24	1-1/2	2-12UN-3B	2.125		.265	2.454	1.370
-28	1-3/4	2-3/8-12N-3B	2.500		.281	2.887	1.400
-32	2	2-5/8-12N-3B	2.750		.281	3.175	1.400
-36	2-1/4	2-7/8-12N-3B	3.000	±.020	.296	3.464	1.400
-40	2-1/2	3-1/8-12N-3B	3.250		.296	3.753	1.400
-48	3	3-5/8-12N-3B	3.750		.312	4.330	1.400
-56	3-1/2	4-12UN-3B	4.125		.312	4.763	1.400
-64	4	4-1/2-12UN-3B	4.625		.312	5.341	1.400

NOTES:

1. NUTS SHALL BE FREE FROM ALL HANGING BURRS AND SLIVERS WHICH MIGHT BECOME DISLODGED UNDER USAGE.
2. MAXIMUM SURFACE ROUGHNESS (REF. MIL-STD-10) 125 RHR.

ENGINEERING INFORMATION: THIS PART USED ON ASSEMBLY DRAWINGS VSF2000 THRU VSF2004

MATERIAL:
ADD DD AFTER DASH NUMBER FOR ALUMINUM ALLOY 2024-T4
ADD T AFTER DASH NUMBER FOR TITANIUM ALLOY 6Al-4V STABILIZED ANNEALED PER AMS4928.
ADD C AFTER DASH NUMBER FOR CORROSION-RESISTANT STEEL CLASS 321 PER QQ-S-763.

HEAT-TREAT:
ALUMINUM ALLOY: AGE TO T6 CONDITION BY HOLDING AT 375°F ± 5°F FOR 12-13 HOURS.
TITANIUM ALLOY: NONE
CORROSION-RESISTANT STEEL: NONE

SURFACE TREATMENT:
ALUMINUM ALLOY: GOLD ANODIZE PER MIL-A-8625 TYPE II
TITANIUM ALLOY: SURFACE CONVERSION PER VOI-SHAN SPECIFICATION VS-3S-FP-T1..
CORROSION RESISTANT STEEL: PASSIVATE PER MIL-S-5002

EXAMPLE OF CODE:
VSF1000-8DD = NUT ALUMINUM ALLOY, FOR USE WITH 1/2 O.D. TUBING
VSF1000-12T = NUT TITANIUM ALLOY, FOR USE WITH 3/4 O.D. TUBING
VSF1000-16C = NUT-CORROSION RESISTANT STEEL, FOR USE WITH 1-O.D. TUBING

DIMENSIONS IN INCHES

PATENT PENDING

APPROVED DATE	TITLE	STANDARD
16 March 1959	NUT	
LATEST REVISION DATE	UNION ASSEMBLY	VSF 1000
23 June 1960	SCOTT CONNECTOR SYSTEM	SHEET 1 OF 1

VOI-SHAN MANUFACTURING COMPANY
A DIVISION OF VOI-SHAN INDUSTRIES, INC.

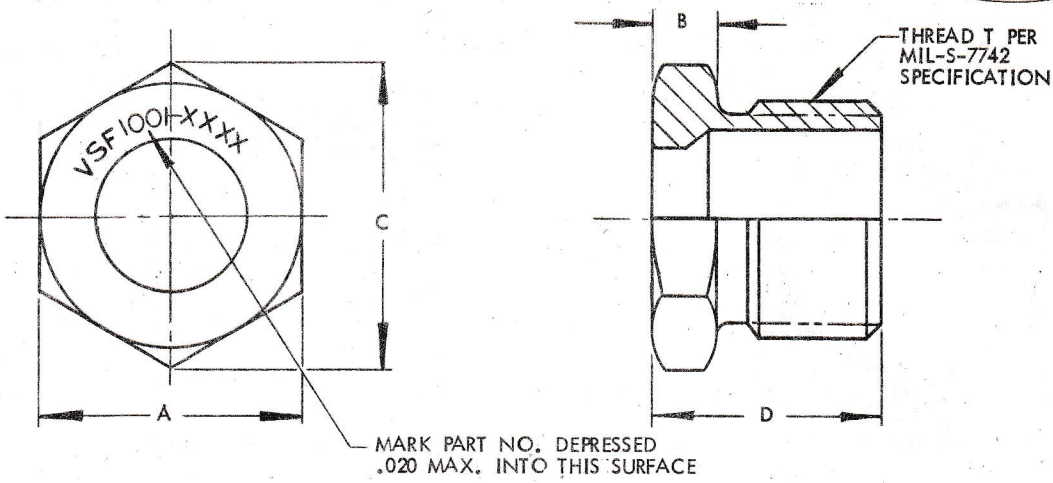

DASH NO.	TUBE SIZE O.D.	THREAD T (MIL-S-7742)	A HEX. FLATS		B ±.020	C (REF)	D ±.020
- 4	1/4	9/16-18UNF-3A	.688		.187	.794	.604
- 5	5/16	5/8-18UNF-3A	.750		.187	.866	.604
- 6	3/8	3/4-16UNF-3A	.875	+.003 -.004	.187	1.010	.656
- 8	1/2	7/8-14UNF-3A	1.000		.218	1.155	.754
-10	5/8	1-12UNF-3A	1.125		.250	1.299	.843
-12	3/4	1-3/16-12UN-3A	1.312		.250	1.516	.875
-16	1	1-7/16-12UN-3A	1.562	±.016	.250	1.804	.875
-20	1-1/4	1-3/4-12UN-3A	1.875		.265	2.165	.890
-24	1-1/2	2-12UN-3A	2.125		.265	2.454	.890
-28	1-3/4	2-3/8-12N-3A	2.500		.281	2.887	.906
-32	2	2-5/8-12N-3A	2.750		.281	3.175	.906
-36	2-1/4	2-7/8-12N-3A	3.000	±.020	.296	3.464	.921
-40	2-1/2	3-1/8-12N-3A	3.250		.296	3.753	.921
-48	3	3-5/8-12N-3A	3.750		.312	4.330	.937
-56	3-1/2	4-12UN-3A	4.125		.312	4.763	.937
-64	4	4-1/2-12UN-3A	4.625		.312	5.341	.937

NOTES:
1. COUPLINGS SHALL BE FREE FROM ALL HANGING BURRS AND SLIVERS WHICH MIGHT BECOME DISLODGED UNDER USAGE.
2. MAXIMUM SURFACE ROUGHNESS (REF. MIL-STD-10) 125 RMS.

ENGINEERING INFORMATION: THIS PART USED ON ASSEMBLY DRAWINGS VSF2000 AND VSF2001

MATERIAL:
ADD DD AFTER DASH NUMBER FOR ALUMINUM ALLOY 2024-T4
ADD T AFTER DASH NUMBER FOR TITANIUM ALLOY 6Al-4V STABILIZED ANNEALED PER AMS4928.
ADD C AFTER DASH NUMBER FOR CORROSION-RESISTANT STEEL CLASS 321 PER QQ-S-763.

HEAT-TREAT:
ALUMINUM ALLOY: AGE TO T6 BY HOLDING AT 375°F ± 5°F FOR 12-13-HOURS
TITANIUM ALLOY: NONE
CORROSION-RESISTANT STEEL: NONE

SURFACE TREATMENT:
ALUMINUM ALLOY: GOLD ANODIZE PER MIL-A-8625 TYPE II
TITANIUM ALLOY: SURFACE CONVERSION PER VOI-SHAN SPECIFICATION VS-3S-FP-TI.
CORROSION RESISTANT STEEL: PASSIVATE PER MIL-S-5002

EXAMPLE OF CODE:
VSF 1001-8DD = COUPLING ALUMINUM ALLOY, FOR USE WITH 1/2-O.D. TUBING
VSF 1001-12T = COUPLING TITANIUM ALLOY, FOR USE WITH 3/4-O.D. TUBING
VSF 1001-16C = COUPLING-CORROSION RESISTANT STEEL, FOR USE WITH 1-O.D. TUBING

DIMENSIONS IN INCHES

PATENT PENDING

APPROVED DATE	TITLE	STANDARD
16 March 1959	COUPLING	VSF 1001
LATEST REVISION DATE	UNION ASSEMBLY	
23 June 1960	SCOTT CONNECTOR SYSTEM	SHEET 1 OF 1

VOI-SHAN MANUFACTURING COMPANY
A DIVISION OF VOI-SHAN INDUSTRIES, INC.

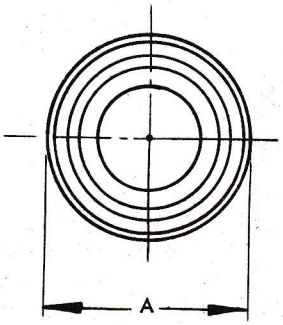

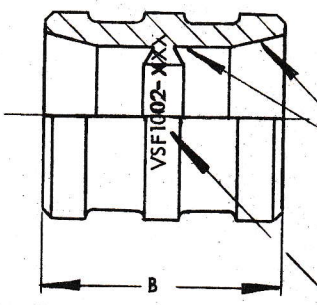

CAVITY PER MS33514 (REF.) BOTH ENDS

MARK PART NO. DEPRESSED .010 MAX. INTO THIS SURFACE

DASH NO.	TUBING SIZE O.D. (REF)	A ±.020	B ±.020
- 4	1/4	.414	.613
- 5	5/16	.477	.649
- 6	3/8	.593	.649
- 8	1/2	.696	.760
-10	5/8	.805	.863
-12	3/4	.977	.855
-16	1	1.226	.985
-20	1-1/4	1.539	.987
-24	1-1/2	1.789	1.127
-32	2	2.413	1.136

NOTES:

1. INSERTS SHALL BE FREE FROM ALL HANGING BURRS AND SLIVERS WHICH MIGHT BECOME DISLODGED UNDER USAGE.
2. MAXIMUM SURFACE ROUGHNESS (REF. MIL-STD-10) 125 RHR.

ENGINEERING INFORMATION: THIS PART USED ON ASSEMBLY DRAWINGS VSF2000 AND VSF2002

MATERIAL:
ADD DD AFTER DASH NUMBER FOR ALUMINUM ALLOY 2024-T4
ADD T AFTER DASH NUMBER FOR TITANIUM ALLOY 6Al-4V STABILIZED ANNEALED PER AMS 4928.
ADD C AFTER DASH NUMBER FOR CORROSION-RESISTANT STEEL TYPE 321 PER QQ-S-763, CLASS 8

HEAT-TREAT:
ALUMINUM ALLOY: AGE TO T6 CONDITION BY HOLDING AT 375°F ± 5°F FOR 12-13 HOURS.
TITANIUM ALLOY: NONE
CORROSION-RESISTANT STEEL: NONE

SURFACE TREATMENT:
ALUMINUM ALLOY: SURFACE CONVERSION PER MIL-C-5541, CLASS I, TYPE II SPECIFICATION
TITANIUM ALLOY: NONE
CORROSION RESISTANT STEEL: PASSIVATE PER MIL-S-5002

EXAMPLE OF CODE:
VSF1002-8DD INSERT - ALUMINUM ALLOY, FOR USE WITH 1/2 O.D. TUBING
VSF1002-12T INSERT - TITANIUM ALLOY, FOR USE WITH 3/4 O.D. TUBING
VSF1002-16C INSERT - CORROSION RESISTANT STEEL, FOR USE WITH 1-O.D. TUBING

DIMENSIONS IN INCHES

PATENT PENDING

APPROVED DATE	TITLE	STANDARD
16 March 1959	INSERT - FLARELESS	VSF 1002
LATEST REVISION DATE	UNION ASSEMBLY	SHEET 1 OF 1
	SCOTT CONNECTOR SYSTEM	

VOI-SHAN MANUFACTURING COMPANY
A DIVISION OF VOI-SHAN INDUSTRIES, INC.

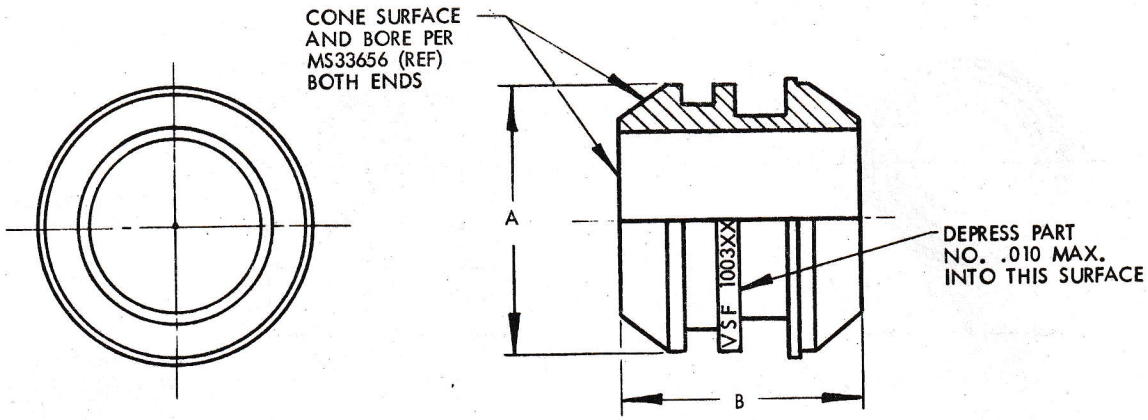

DASH NO.	TUBE SIZE O.D.	A ±.020	B ±.020		
			LONG	MEDIUM	SHORT
-4	1/4	.414	.761	.704	.642
-5	5/16	.477	.789	.732	.672
-6	3/8	.593	.879	.822	.764
-8	1/2	.695	.958	.900	.843
-10	5/8	.805	1.068	1.010	.952
-12	3/4	.977	1.068	1.010	.952
-16	1	1.226	1.068	1.010	.952
-20	1-1/4	1.539	1.180	1.123	1.065
-24	1-1/2	1.789	1.210	1.153	1.095
-28	1-3/4	2.163	1.230	1.173	1.115
-32	2	2.413	1.248	1.191	1.133
-40	2-1/2	2.912	1.248	1.191	1.133
-48	3	3.412	1.248	1.191	1.133

NOTES:

1. INSERTS SHALL BE FREE FROM ALL HANGING BURRS AND SLIVERS WHICH MIGHT BECOME DISLODGED UNDER USAGE.
2. MAXIMUM SURFACE ROUGHNESS (REF. MIL-STD-10) 125 RHR.

ENGINEERING INFORMATION: THIS PART USED ON ASSEMBLY DRAWING VSF 2001, VSF 2003 AND VSF 2004.

MATERIAL:
ADD DD AFTER DASH NUMBER FOR ALUMINUM ALLOY 2024-T4
ADD T AFTER DASH NUMBER FOR TITANIUM ALLOY 6Al-4V STABILIZED ANNEALED PER AMS4928
ADD C AFTER DASH NUMBER FOR CORROSION RESISTANT STEEL TYPE 321 PER QQ-S-763, CLASS 8

HEAT-TREAT:
ALUMINUM ALLOY: AGE TO T6 CONDITION BY HOLDING AT 375°F ± 5°F FOR 12-13 HOURS.
TITANIUM ALLOY: NONE
CORROSION RESISTANT STEEL: NONE

SURFACE TREATMENT:
ALUMINUM ALLOY: SURFACE CONVERSION PER MIL-C-5541, CLASS I, TYPE II SPECIFICATION
TITANIUM ALLOY: NONE
CORROSION RESISTANT STEEL: PASSIVATE PER MIL-S-5002

TUBE WALL THICKNESS:
ADD A AFTER BASIC NO. FOR LONG TYPE INSERT USED WITH TUBE WALL THICKNESS .010 TO .035.
ADD B AFTER BASIC NO. FOR MEDIUM TYPE INSERT USED WITH TUBE WALL THICKNESS .035 TO .057.
ADD C AFTER BASIC NO. FOR SHORT TYPE INSERT USED WITH TUBE WALL THICKNESS .058 TO .083

EXAMPLE OF CODE:
VSF 1017B16T INSERT, MEDIUM TYPE-TITANIUM ALLOY, FOR USE WITH 1-INCH O.D. TUBING (.035 TO .057 WALL)
VSF 1017A8DD INSERT, LONG TYPE-ALUMINUM ALLOY, FOR USE WITH 1/2-INCH O.D. TUBING (.010 TO .034 WALL)

DIMENSIONS IN INCHES

PATENT PENDING

APPROVED DATE	TITLE	STANDARD
15 September 1959	INSERT - FLARED UNION ASSEMBLY SCOTT CONNECTOR SYSTEM	VSF 1003
LATEST REVISION DATE		SHEET 1 OF 1

VOI-SHAN MANUFACTURING COMPANY
A DIVISION OF VOI-SHAN INDUSTRIES, INC.

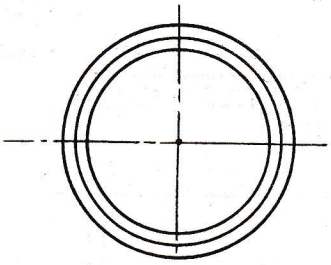

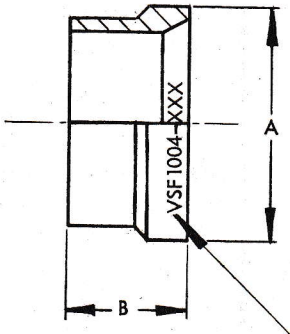

MARK PART NO.
DEPRESSED .010 MAX.
INTO THIS SURFACE

DASH NO.	TUBE SIZE O.D.	A ±.020	B ±.020
- 4	1/4	.386	.418
- 5	5/16	.449	.418
- 6	3/8	.506	.418
- 8	1/2	.678	.450
-10	5/8	.790	.450
-12	3/4	.977	.510
-16	1	1.226	.546
-20	1-1/4	1.539	.562
-24	1-1/2	1.789	.562
-28	1-3/4	2.163	.616
-32	2	2.413	.616
-40	2-1/2	2.912	.616
-48	3	3.412	.616

NOTES:

1. SLEEVES SHALL BE FREE FROM ALL HANGING BURRS AND SLIVERS WHICH MIGHT BECOME DISLODGED UNDER USAGE.
2. MAXIMUM SURFACE ROUGHNESS (REF. MIL-STD-10) 125 RHR.

ENGINEERING INFORMATION: THIS PART USED ON ASSEMBLY DRAWINGS VSF2001, VSF2003 AND VSF2004.

MATERIAL:
ADD DD AFTER DASH NUMBER FOR ALUMINUM ALLOY 2024-T4.
ADD T AFTER DASH NUMBER FOR TITANIUM ALLOY 6Al-4V STABILIZED ANNEALED PER AMS4928.
ADD C AFTER DASH NUMBER FOR CORROSION-RESISTANT STEEL TYPE 321 PER QQ-S-763, CLASS 8.

HEAT-TREAT:
ALUMINUM ALLOY: AGE TO T6 CONDITION BY HOLDING AT 375°F ± 5°F FOR 12-13 HOURS.
TITANIUM ALLOY: NONE
CORROSION-RESISTANT STEEL: NONE

SURFACE TREATMENT:
ALUMINUM ALLOY: GOLD ANODIZE PER MIL-A-8625 TYPE II
TITANIUM ALLOY: NONE
CORROSION RESISTANT STEEL: PASSIVATE PER MIL-S-5002

EXAMPLE OF CODE:
VSF1004-8DD SLEEVE - ALUMINUM ALLOY, FOR USE WITH 1/2 O.D. TUBING
VSF1004-12T SLEEVE - TITANIUM ALLOY, FOR USE WITH 3/4 O.D. TUBING
VSF1004-16C SLEEVE - CORROSION RESISTANT STEEL, FOR USE WITH 1-O.D. TUBING

DIMENSIONS IN INCHES

PATENT PENDING

APPROVED DATE	TITLE	STANDARD
16 March 1959	SLEEVE - FLARED UNION ASSEMBLY SCOTT CONNECTOR SYSTEM	VSF 1004
LATEST REVISION DATE		SHEET 1 OF 1

VOI-SHAN MANUFACTURING COMPANY
A DIVISION OF VOI-SHAN INDUSTRIES, INC.

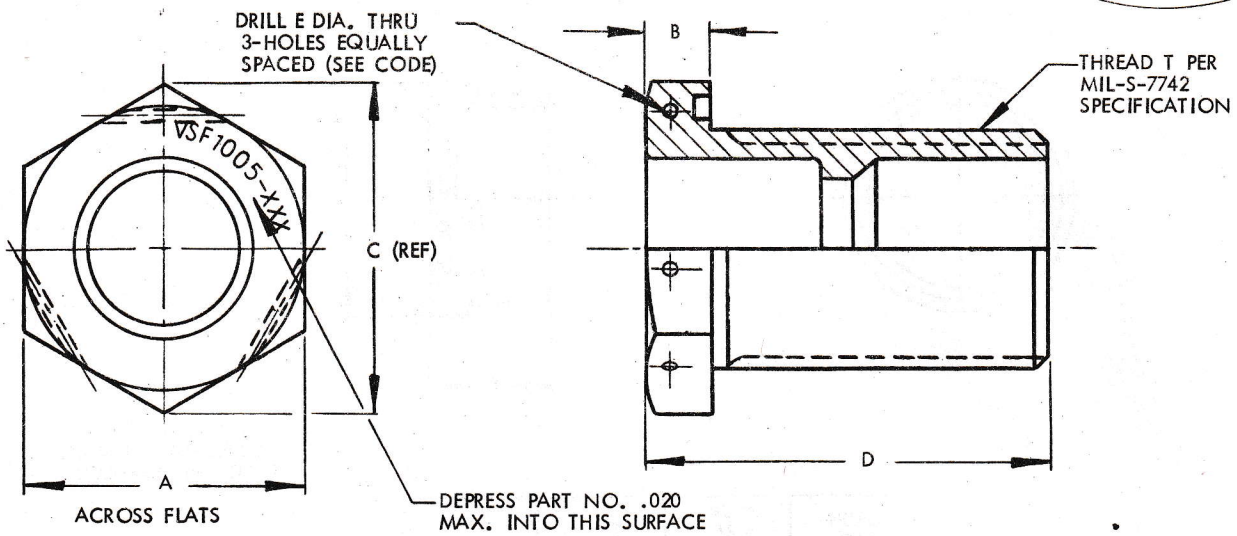

DASH NO.	TUBE SIZE O.D.	THREAD T (MIL-S-7742)	A HEX. FLATS		B ±.020	C (REF.)	D ±.020	E +.010 -.000
-4	1/4	9/16-18UNF-3A	.812		.187	.938	1.104	.046
-5	5/16	5/8-18UNF-3A	.875		.187	1.010	1.104	.046
-6	3/8	3/4-16UNF-3A	1.000		.187	1.155	1.156	.046
-8	1/2	7/8-14UNF-3A	1.125	+.003 -.004	.218	1.300	1.254	.046
-10	5/8	1-12UNF-3B	1.250		.218	1.443	1.421	.046
-12	3/4	1-3/16-12UN-3A	1.437		.250	1.660	1.453	.046
-16	1	1-7/16-12UN-3A	1.812		.250	2.093	1.453	.046
-20	1-1/4	1-3/4-12UN-3A	2.125	±.016	.265	2.453	1.468	.070
-24	1-1/2	2-12UN-3A	2.375		.265	2.742	1.468	.070
-28	1-3/4	2-3/8-12N-3A	2.750		.281	3.175	1.468	.070
-32	2	2-5/8-12N-3A	3.000		.281	3.464	1.484	.070
-36	2-1/4	2-7/8-12N-3A	3.375	±.020	.296	3.897	1.500	.070
-40	2-1/2	3-1/8-12N-3A	3.625		.296	4.186	1.500	.070
-48	3	3-5/8-12N-3A	4.125		.312	4.763	1.515	.070
-56	3-1/2	4-12UN-3B	4.500		.312	5.196	1.515	.070
-64	4	4-1/2-12UN-3A	5.000		.312	5.774	1.515	.070

NOTES:

1. COUPLINGS SHALL BE FREE FROM ALL HANGING BURRS AND SLIVERS WHICH MIGHT BECOME DISLODGED UNDER USAGE.
2. MAXIMUM SURFACE ROUGHNESS (REF. MIL-STD-10) 125 RMS.

ENGINEERING INFORMATION: THIS PART USED ON ASSEMBLY DRAWINGS VSF2002 THRU VSF2004.

MATERIAL:
ADD DD AFTER DASH NUMBER FOR ALUMINUM ALLOY 2024-T4
ADD T AFTER DASH NUMBER FOR TITANIUM ALLOY 6Al-4V STABILIZED ANNEALED PER AMS 4928.
ADD C AFTER DASH NUMBER FOR CORROSION-RESISTANT STEEL CLASS 321 PER QQ-S-763.

HEAT-TREAT:
ALUMINUM ALLOY: AGE TO T6 CONDITION BY HOLDING AT 375°F ± 5°F FOR 12-13 HOURS
TITANIUM ALLOY: NONE
CORROSION-RESISTANT STEEL: NONE

SURFACE FINISH:
ALUMINUM ALLOY: GOLD ANODIZE PER MIL-A-8625 TYPE II
TITANIUM ALLOY: SURFACE CONVERSION PER VOI-SHAN SPECIFICATION VS-3S-FP-T1.
CORROSION RESISTANT STEEL: PASSIVATE PER MIL-S-5002

LOCKWIRE HOLES: ADD L AFTER BASIC PART NUMBER FOR LOCKWIRE HOLES

EXAMPLE OF CODE:
VSF 1005-8DD = COUPLING, ALUMINUM ALLOY, FOR USE WITH 1/2 O.D. TUBING
VSF 1005L 12T = COUPLING, TITANIUM ALLOY, WITH LOCKWIRE HOLES, FOR USE WITH 3/4 O.D. TUBING.

DIMENSIONS IN INCHES

PATENT PENDING

APPROVED DATE	TITLE	STANDARD
19 March 1959	COUPLING - BULKHEAD UNION ASSEMBLY SCOTT CONNECTOR SYSTEM	VSF 1005
LATEST REVISION DATE 15 July 1960		SHEET 1 OF 1

VOI-SHAN MANUFACTURING COMPANY
A DIVISION OF VOI-SHAN INDUSTRIES, INC.

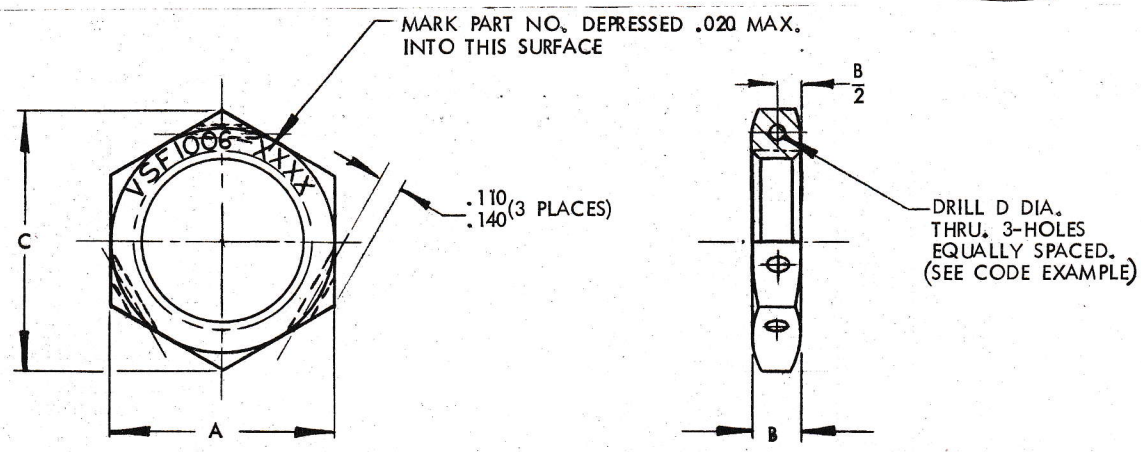

DASH NO.	TUBE SIZE O.D.	THREAD T (MIL-S-7742)	A HEX. FLATS		B ±.020	C (REF)	D +.010 -.000
-4	1/4	9/16-18UNF-3B	.812		.139	.938	
-5	5/16	5/8-18UNF-3B	.875		.139	1.010	
-6	3/8	3/4-16UNF-3B	1.000		.156	1.155	
-8	1/2	7/8-14UNF-3B	1.125	+.003 -.004	.179	1.299	.046
-10	5/8	1-12UNF-3B	1.250		.212	1.443	
-12	3/4	1-3/16-12UN-3B	1.437		.212	1.660	
-16	1	1-7/16-12UN-3B	1.812		.212	2.093	
-20	1-1/4	1-3/4-12UN-3B	2.125	±.016	.212	2.453	
-24	1-1/2	2-12UN-3B	2.375		.212	2.742	
-28	1-3/4	2-3/8 12N-3B	2.750		.212	3.175	
-32	2	2-5/8 12N-3B	3.000		.212	3.464	
-36	2-1/4	2-7/8 12N-3B	3.375	±.020	.212	3.897	.070
-40	2-1/2	3-1/8 12N-3B	3.625		.212	4.186	
-48	3	3-5/8 12N-3B	4.125		.212	4.763	
-56	3-1/2	4-12UN-3B	4.500		.212	5.196	
-64	4	4-1/2-12UN-3B	5.000		.212	5.774	

NOTES:

1. NUTS SHALL BE FREE FROM ALL HANGING BURRS AND SLIVERS WHICH MIGHT BECOME DISLODGED UNDER USAGE.
2. MAXIMUM SURFACE ROUGHNESS (REF. MIL-STD-10) 125 RHR..

ENGINEERING INFORMATION: THIS PART USED ON ASSEMBLY DRAWINGS VSF2002 THRU VSF 2004.

MATERIAL:
ADD DD AFTER DASH NUMBER FOR ALUMINUM ALLOY 2024-T4
ADD T AFTER DASH NUMBER FOR TITANIUM ALLOY 6Al-4V STABILIZED ANNEALED PER AMS4928.
ADD C AFTER DASH NUMBER FOR CORROSION-RESISTANT STEEL TYPE 321 PER QQ-S-763, CLASS 8

HEAT-TREAT:
ALUMINUM ALLOY: AGE TO T6 CONDITION BY HOLDING AT 375°F ± 5°F FOR 12-13 HOURS.
TITANIUM ALLOY: NONE
CORROSION-RESISTANT STEEL: NONE

SURFACE TREATMENT:
ALUMINUM ALLOY: GOLD ANODIZE PER MIL-A-8625 TYPE II
TITANIUM ALLOY: SURFACE CONVERSION PER VOI-SHAN SPECIFICATION VS-3S-FP-TI.
CORROSION RESISTANT STEEL: PASSIVATE PER MIL-S-5002

LOCKWIRE HOLES: ADD L AFTER BASIC PART NUMBER FOR LOCKWIRE HOLES

EXAMPLE OF CODE:
VSF 1006-8DD = NUT, ALUMINUM ALLOY FOR USE WITH 1/2 O.D. TUBING.
VSF 1006L12T = NUT, TITANIUM ALLOY, WITH LOCKWIRE HOLES, FOR USE WITH 3/4 O.D. TUBING.

DIMENSIONS IN INCHES

PATENT PENDING

APPROVED DATE	TITLE	STANDARD
16 March 1959	NUT - JAM - BULKHEAD UNION ASSEMBLY	VSF 1006
LATEST REVISION DATE 15 July 1960	SCOTT CONNECTOR SYSTEM	SHEET 1 OF 1

VOI-SHAN MANUFACTURING COMPANY
A DIVISION OF VOI-SHAN INDUSTRIES, INC.

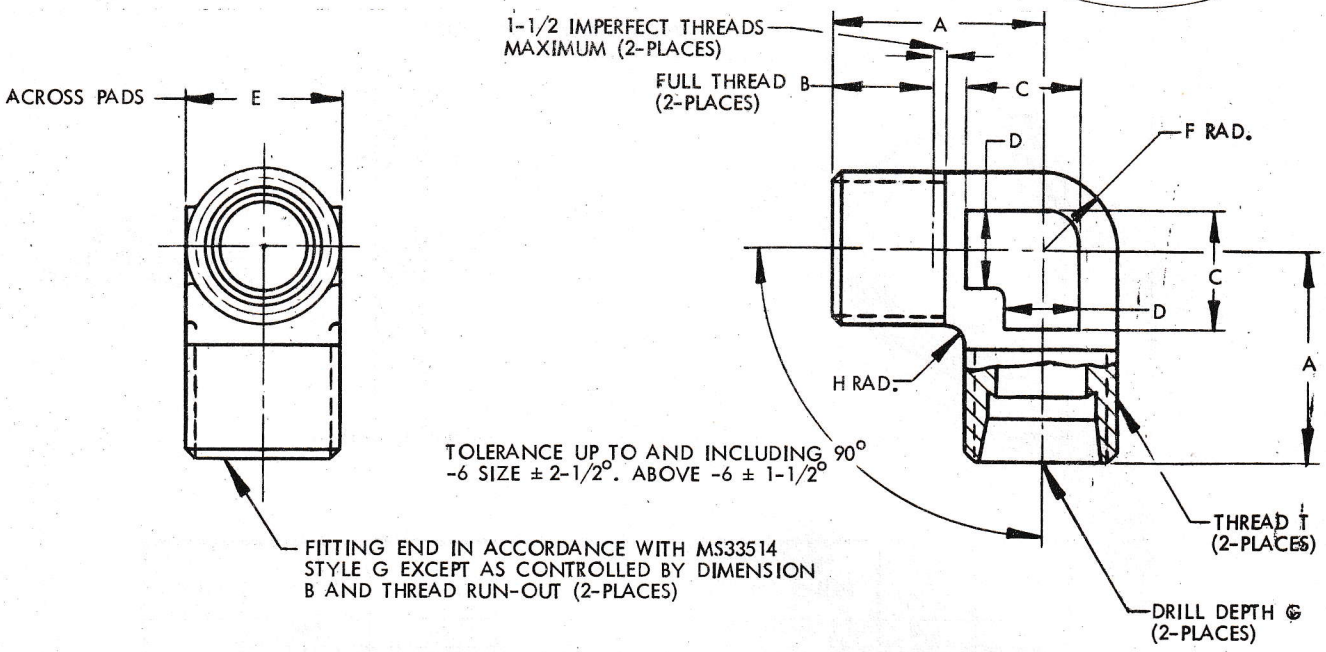

DASH NO.	TUBE SIZE O.D.	THREAD T (MIL-S-7742)	A + 1/32 - 0	B +.030 -.000	C APPROX.	D APPROX.	E ± 1/64	F ±1/32	G + 1/32 - 0	H ± 1/64
					WRENCH PADS					
4	1/4	7/16-20UNF-3A	21/32	.322	21/64	7/32	7/16	7/32	45/64	1/32
5	5/16	1/2-20UNF-3A	11/16	.327	3/8	1/4	1/2	1/4	47/64	
6	3/8	9/16-18UNF-3A	23/32	.310	27/64	9/32	9/16	9/32	25/32	
8	1/2	3/4-16UNF-3A	61/64	.415	9/16	3/8	3/4	3/8	1-1/64	1/16
10	5/8	7/8-14UNF-3A	1-3/32	.469	21/32	7/16	7/8	7/16	1-5/32	
12	3/4	1-1/16-12UN-3A	1-9/32	.569	3/4	1/2	1-1/16	17/32	1-11/32	
16	1	1-5/16-12UN-3A	1-33/64	.635	15/16	5/8	1-5/16	21/32	1-41/64	3/32
20	1-1/4	1-5/8-12N-3A	1-43/64	.631	1-7/32	13/16	1-5/8	13/16	1-51/64	
24	1-1/2	1-7/8-12N-3A	1-55/64	.697	1-13/32	15/16	1-7/8	15/16	1-63/64	
32	2	2-1/2-12UN-3A	2-17/64	.765	1-7/8	1-1/4	2-1/2	1-1/4	2-29/64	1/8

NOTES:
1. FITTINGS SHALL BE FREE FROM ALL HANGING BURRS AND SLIVERS WHICH MIGHT BECOME DISLODGED UNDER USAGE.
2. ALL THREADS PER MIL-S-7742.
3. MAXIMUM SURFACE ROUGHNESS (REF. MIL-STD-10) 125 RHR EXCEPT AS NOTED.

MATERIAL: ADD DD AFTER DASH NO. FOR ALUMINUM ALLOY FORGINGS 2014, SPECIFICATION QQ-A-367, CLASS-5, CONDITION T-6.

ADD C AFTER DASH NO. FOR CORROSION RESISTANT STEEL FORGINGS 321 SPECIFICATION QQ-S-763 CONDITION A.

ADD T AFTER DASH NO. FOR TITANIUM ALLOY FORGINGS 6Al-4V, SPECIFICATION AMS4928

SURFACE TREATMENT:
ALUMINUM ALLOY: GOLD ANODIZE PER MIL-A-8625, TYPE II
CORROSION RESISTANT STEEL: PASSIVATE PER MIL-S-5002
TITANIUM ALLOY: SURFACE CONVERSION PER VOI-SHAN SPECIFICATION VS-3S-FP-T1

IDENTIFICATION: MARK PART NO. DEPRESSED .020 MAX. INTO PAD SURFACES(S).

EXAMPLE OF CODE: VSF1007 - 8DD = ELBOW, FLARELESS, 90° - ALUMINUM ALLOY, FOR USE WITH 1/2 O.D. TUBING.

VSF1007 - 12C = ELBOW, FLARELESS, 90° - CORROSION RESISTANT STEEL, FOR USE WITH 3/4 O.D. TUBING.

DIMENSIONS IN INCHES

PATENT PENDING

APPROVED DATE	TITLE	STANDARD
9 June 1959	ELBOW - FLARELESS, 90°	VSF 1007
LATEST REVISION DATE	LIGHTWEIGHT	SHEET 1 OF 1
22 September 1959		

VOI-SHAN MANUFACTURING COMPANY
A DIVISION OF VOI-SHAN INDUSTRIES, INC.

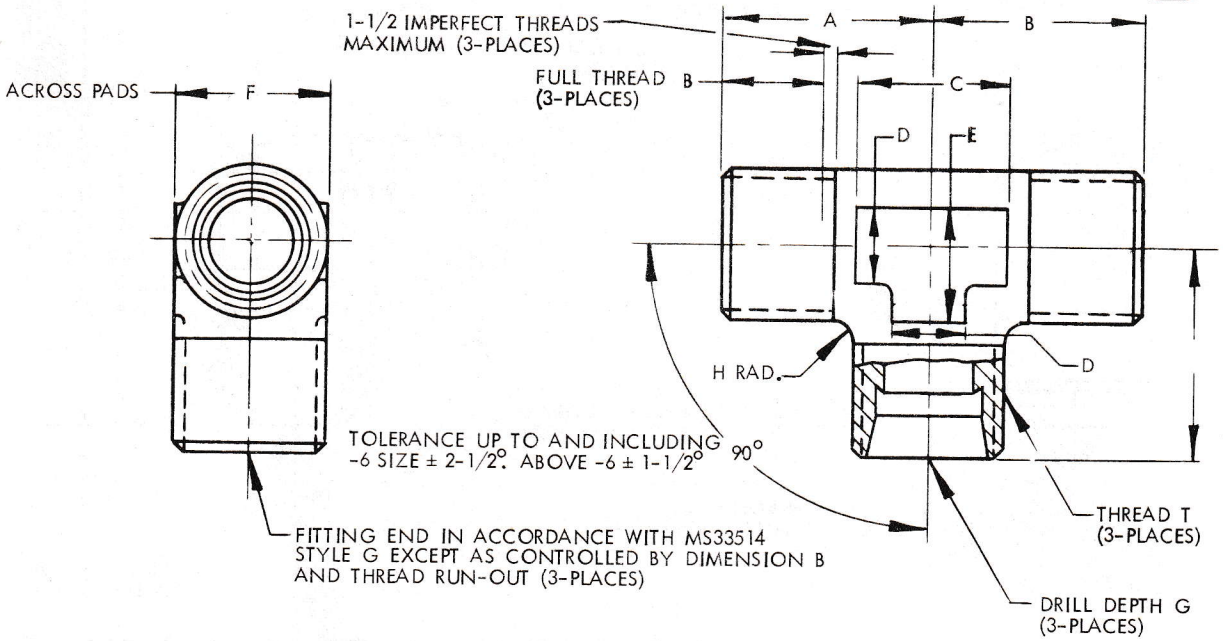

DASH NO.	TUBE SIZE O.D.	THREAD (MIL-S-7742)	A + 1/32 - 0	B +.030 -.000	C APPROX.	D APPROX.	E APPROX.	F ± 1/64	G + 1/32 - 0	H ± 1/64
					WRENCH PADS					
4	1/4	7/16-20UNF-3A	21/32	.322	7/16	7/32	21/64	7/16	45/64	1/32
5	5/16	1/2-20UNF-3A	11/16	.327	1/2	1/4	3/8	1/2	47/64	
6	3/8	9/16-18UNF-3A	23/32	.310	9/16	9/32	27/64	9/16	25/32	
8	1/2	3/4-16UNF-3A	61/64	.415	3/4	3/8	9/16	3/4	1-1/64	1/16
10	5/8	7/8-14UNF-3A	1-3/32	.469	7/8	7/16	21/32	7/8	1-5/32	
12	3/4	1-1/16-12UN-3A	1-9/32	.569	1-1/16	1/2	3/4	1-1/16	1-11/32	
16	1	1-5/16-12UN-3A	1-33/64	.635	1-5/16	5/8	15/16	1-5/16	1-41/64	3/32
20	1-1/4	1-5/8-12N-3A	1-43/64	.631	1-5/8	13/16	1-7/32	1-5/8	1-51/64	
24	1-1/2	1-7/8-12N-3A	1-55/64	.697	1-7/8	15/16	1-13/32	1-7/8	1-63/64	
32	2	2-1/2-12UN-3A	2-17/64	.765	2-1/2	1-1/4	1-7/8	2-1/2	2-29/64	1/8

NOTES:
1. FITTINGS SHALL BE FREE FROM ALL HANGING BURRS AND SLIVERS WHICH MIGHT BECOME DISLODGED UNDER USAGE.
2. ALL THREADS PER MIL-S-7742
3. MAXIMUM SURFACE ROUGHNESS (REF. MIL-STD-10) 125 RHR EXCEPT AS NOTED.

MATERIAL: ADD DD AFTER DASH NO. FOR ALUMINUM ALLOY FORGINGS 2014, SPECIFICATION QQ-A-367, CLASS-5, CONDITION T-6.

ADD C AFTER DASH NO. FOR CORROSION RESISTANT STEEL FORGINGS 321 SPECIFICATION QQ-S-763 CONDITION A.

ADD T AFTER DASH NO. FOR TITANIUM ALLOY FORGINGS 6Al-4V, SPECIFICATION AMS4928

SURFACE TREATMENT:
ALUMINUM ALLOY: GOLD ANODIZE PER MIL-A-8625, TYPE II
CORROSION RESISTANT STEEL: PASSIVATE PER MIL-S-5002
TITANIUM ALLOY: SURFACE CONVERSION PER VOI-SHAN SPECIFICATION VS-3S-FP-T1

IDENTIFICATION: MARK PART NO. DEPRESSED .020 MAX. INTO PAD SURFACES(S).

EXAMPLE OF CODE:
VSF1009-8DD = TEE - FLARELESS - ALUMINUM ALLOY, FOR USE WITH 1/2 O.D. TUBING.
VSF1009-12C = TEE - FLARELESS - CORROSION RESISTANT STEEL, FOR USE WITH 3/4 O.D. TUBING.

DIMENSIONS IN INCHES

PATENT PENDING

APPROVED DATE	TITLE	STANDARD
9 June 1959	TEE - FLARELESS	
LATEST REVISION DATE	LIGHTWEIGHT	VSF 1009
22 September 1959		SHEET 1 OF 1

VOI-SHAN MANUFACTURING COMPANY
A DIVISION OF VOI-SHAN INDUSTRIES, INC.

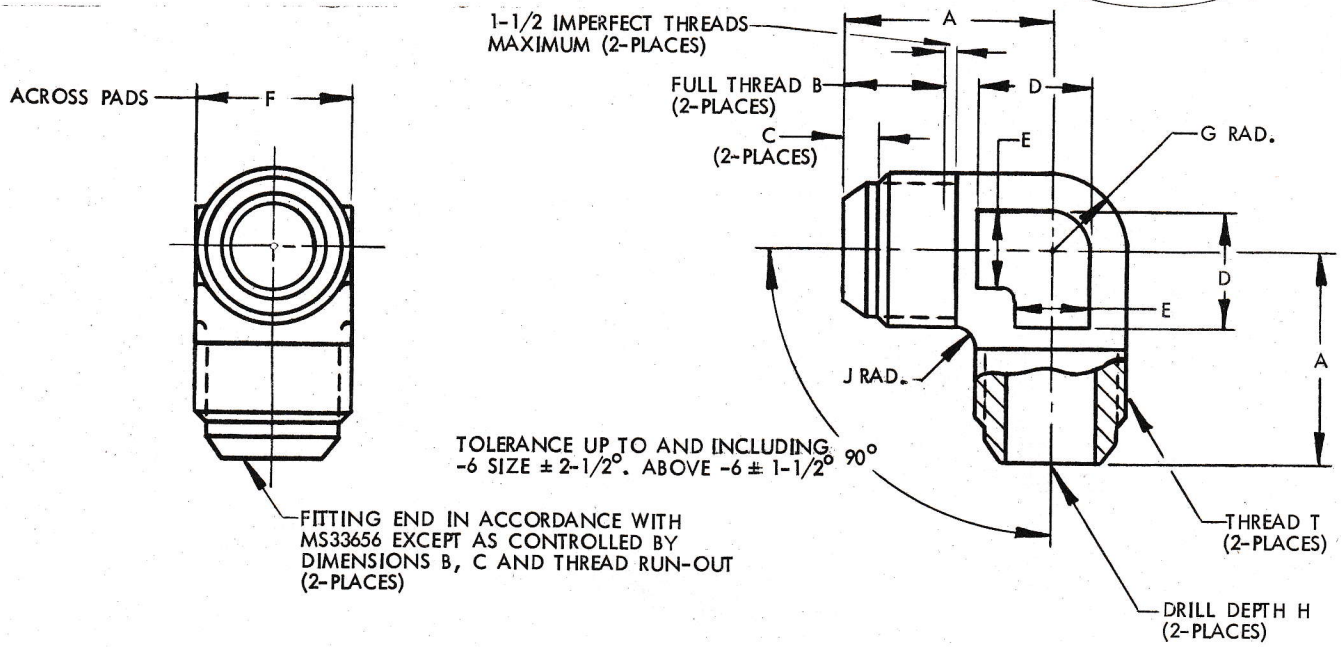

DASH NO.	TUBE SIZE O.D.	THREAD T (MIL-S-7742)	A + 1/32 - 0	B + .030 -..000	C +.015 -.000	D APPROX.	E APPROX.	F ± 1/64	G ± 1/32	H + 1/32 - 0	J ± 1/64
						WRENCH PADS					
4	1/4	7/16-20UNF-3A	11/16	.348	.123	21/64	7/32	7/16	7/32	47/64	1/32
5	5/16	1/2-20UNF-3A	23/32	.348	.123	3/8	1/4	1/2	1/4	49/64	
6	3/8	9/16-18UNF-3A	25/32	.369	.119	27/64	9/32	9/16	9/32	27/32	
8	1/2	3/4-16UNF-3A	1	.448	.167	9/16	3/8	3/4	3/8	1-1/16	1/16
10	5/8	7/8-14UNF-3A	1-1/8	.490	.169	21/32	7/16	7/8	7/16	1-3/16	
12	3/4	1-1/16-12UN-3A	1-21/64	.577	.202	3/4	1/2	1-1/16	17/32	1-25/64	
16	1	1-5/16-12UN-3A	1-31/64	.577	.202	15/16	5/8	1-5/16	21/32	1-39/64	3/32
20	1-1/4	1-5/8-12N-3A	1-11/16	.629	.254	1-7/32	13/16	1-5/8	13/16	1-13/16	
24	1-1/2	1-7/8-12N-3A	1-53/64	.640	.265	1-13/32	15/16	1-7/8	15/16	1-61/64	
28	1-3/4	2-1/4-12UN-3A	2-3/32	.713	.338	1-11/16	1-1/8	2-1/4	1-1/8	2-7/32	1/8
32	2	2-1/2-12UN-3A	2-1/4	.723	.348	1-7/8	1-1/4	2-1/2	1-1/4	2-7/16	
40	2-1/2	3-12UN-3A	2-1/2	.727	.352	2-1/4	1-1/2	3	1-1/2	2-11/16	
48	3	3-1/2-12UN-3A	2-3/4	.727	.352	2-5/8	1-3/4	3-1/2	1-3/4	2-15/16	

NOTES:
1. FITTINGS SHALL BE FREE FROM ALL HANGING BURRS AND SLIVERS WHICH MIGHT BECOME DISLODGED UNDER USAGE.
2. ALL THREADS PER MIL-S-7742 SPECIFICATION
3. MAXIMUM SURFACE ROUGHNESS (REF. MIL-STD-10) 125 RHR UNLESS OTHERWISE SPECIFIED.

MATERIAL: ADD DD AFTER DASH NO. FOR ALUMINUM ALLOY FORGINGS 2014, SPECIFICATION QQ-A-367, CLASS-5, CONDITION T-6.

ADD C AFTER DASH NO. FOR CORROSION RESISTANT STEEL FORGINGS 321 SPECIFICATION QQ-S-763 CONDITION A.

ADD T AFTER DASH NO. FOR TITANIUM ALLOY FORGINGS 6Al-4V, SPECIFICATION AMS 4928.

SURFACE TREATMENT:
ALUMINUM ALLOY: GOLD ANODIZE PER MIL-A-8625, TYPE II.
CORROSION RESISTANT STEEL: PASSIVATE PER MIL-S-5002
TITANIUM ALLOY: SURFACE CONVERSION PER VOI-SHAN SPECIFICATION VS-3S-FP-T1.

IDENTIFICATION: MARK PART NO. DEPRESSED .020 MAX. INTO PAD SURFACE(S).

EXAMPLE OF CODE:
VSF1008 - 8DD = ELBOW - FLARED, 90° - ALUMINUM ALLOY, FOR USE WITH 1/2 O.D. TUBING
VSF1008 - 12T = ELBOW - FLARED, 90° - TITANIUM ALLOY, FOR USE WITH 3/4 O.D. TUBING

DIMENSIONS IN INCHES

PATENT PENDING

APPROVED DATE	TITLE	STANDARD
9 June 1959	ELBOW - FLARED, 90°F'	VSF 1008
LATEST REVISION DATE 22 September 1959	LIGHTWEIGHT	SHEET 1 OF 1

VOI-SHAN MANUFACTURING COMPANY
A DIVISION OF VOI-SHAN INDUSTRIES, INC.

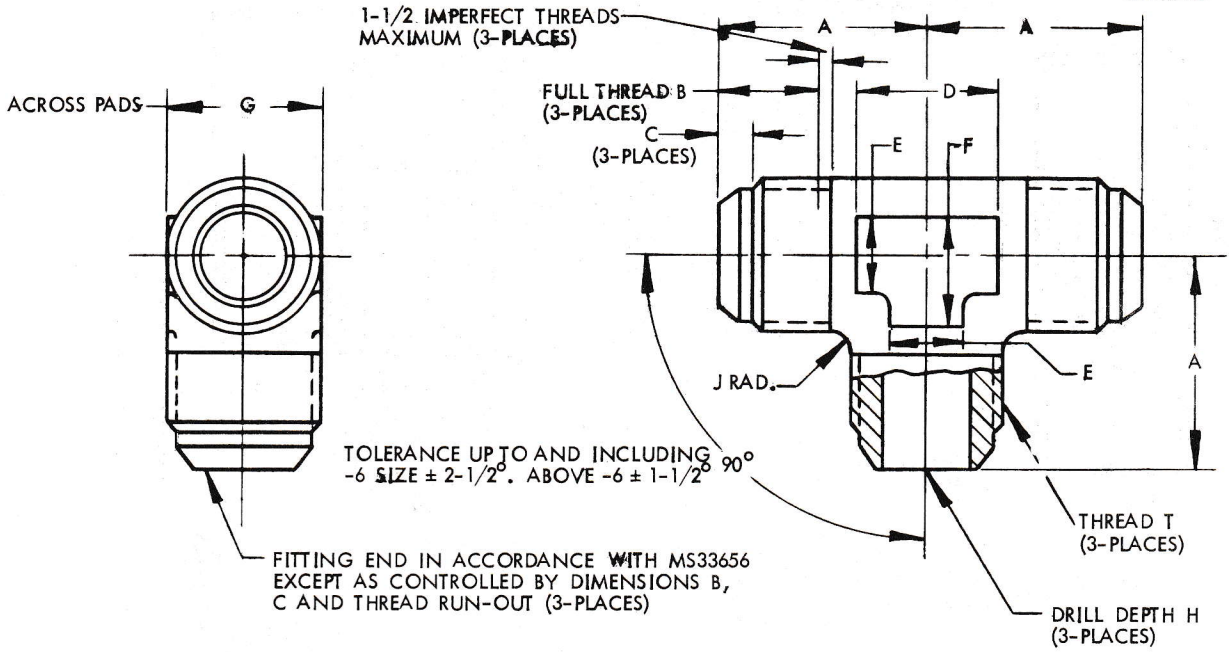

DASH NO.	TUBE SIZE O.D.	THREAD T (MIL-S-7742)	A + 1/32 - 0	B + .030 - .000	C +.015 -.000	D APPROX.	E APPROX.	F APPROX.	G ± 1/64	H + 1/32 - 0	J ± 1/64
						WRENCH PADS					
4	1/4	7/16-20UNF-3A	11/16	.348	.123	7/16	7/32	21/64	7/16	47/64	1/32
5	5/16	1/2-20UNF-3A	23/32	.348	.123	1/2	1/4	3/8	1/2	49/64	
6	3/8	9/16-18UNF-3A	25/32	.369	.119	9/16	9/32	27/64	9/16	27/32	
8	1/2	3/4-16UNF-3A	1	.448	.167	3/4	3/8	9/16	3/4	1-1/16	1/16
10	5/8	7/8-14UNF-3A	1-1/8	.490	.169	7/8	7/16	21/32	7/8	1-3/16	
12	3/4	1-1/16-12UN-3A	1-21/64	.577	.202	1-1/16	1/2	3/4	1-1/16	1-25/64	
16	1	1-5/16-12UN-3A	1-31/64	.577	.202	1-5/16	5/8	15/16	1-5/16	1-39/64	3/32
20	1-1/4	1-5/8-12N-3A	1-11/16	.629	.254	1-5/8	13/16	1-7/32	1-5/8	1-13/16	
24	1-1/2	1-7/8-12N-3A	1-53/64	.640	.265	1-7/8	15/16	1-13/32	1-7/8	1-61/64	
28	1-3/4	2-1/4-12UN-3A	2-3/32	.713	.338	2-1/4	1-1/8	1/11/16	2-1/4	2-7/32	1/8
32	2	2-1/2-12UN-3A	2-1/4	.723	.348	2-1/2	1-1/4	1-7/8	2-1/2	2-7/16	
40	2-1/2	3-12UN-3A	2-1/2	.727	.352	3	1-1/2	2-1/4	3	2-11/16	
48	3	3-1/2-12UN-3A	2-3/4	.727	.352	3-1/2	1-3/4	2-5/8	3-1/2	2-15/16	

NOTES:
1. FITTINGS SHALL BE FREE FROM ALL HANGING BURRS AND SLIVERS WHICH MIGHT BECOME DISLODGED UNDER USAGE.
2. ALL THREADS PER MIL-S-7742 SPECIFICATION
3. MAXIMUM SURFACE ROUGHNESS (REF. MIL-STD-10) 125 RHR UNLESS OTHERWISE SPECIFIED.

MATERIAL: ADD DD AFTER DASH NO. FOR ALUMINUM ALLOY FORGINGS 2014, SPECIFICATION QQ-A-367, CLASS-5, CONDITION T-6.

ADD C AFTER DASH NO. FOR CORROSION RESISTANT STEEL FORGINGS 321 SPECIFICATION QQ-S-763 CONDITION A.

ADD T AFTER DASH NO. FOR TITANIUM ALLOY FORGINGS 6Al-4V, SPECIFICATION AMS 4928.

SURFACE TREATMENT:
ALUMINUM ALLOY: GOLD ANODIZE PER MIL-A-8625, TYPE II.
CORROSION RESISTANT STEEL: PASSIVATE PER MIL-S-5002
TITANIUM ALLOY: SURFACE CONVERSION PER VOI-SHAN SPECIFICATION VS-3S-FP-T1.

IDENTIFICATION: MARK PART NO. DEPRESSED .020 MAX. INTO PAD SURFACE(S).

EXAMPLE OF CODE:
VSF1010-8DD = TEE - FLARED, ALUMINUM ALLOY, FOR USE WITH 1/2 O.D. TUBING.
VSF1010-10T = TEE - FLARED, TITANIUM ALLOY, FOR USE WITH 5/8 O.D. TUBING.

DIMENSIONS IN INCHES

PATENT PENDING

APPROVED DATE	TITLE	STANDARD
9 June 1959	TEE - FLARED	VSF 1010
LATEST REVISION DATE	LIGHTWEIGHT	SHEET 1 OF 1
22 September 1959		

VOI-SHAN MANUFACTURING COMPANY
A DIVISION OF VOI-SHAN INDUSTRIES, INC.

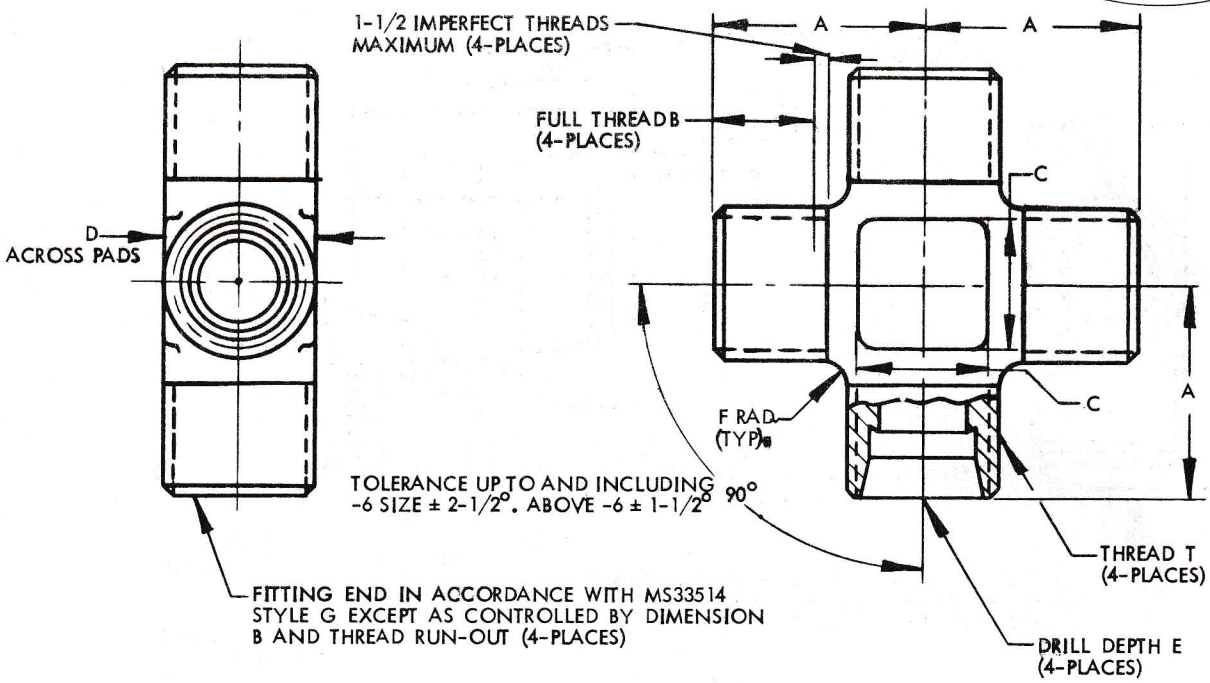

DASH NO.	TUBE SIZE O.D.	THREAD T (MIL-S-7742)	A + 1/32 - 0	B +.030 -.000	C APPROX. ± 1/64 WRENCH PADS	D ± 1/64 WRENCH PADS	E + 1/32 - 0	F ± 1/64
4	1/4	7/16-20UNF-3A	21/32	.322	7/16	7/16	45/64	1/32
5	5/16	1/2-20UNF-3A	11/16	.327	1/2	1/2	47/64	
6	3/8	9/16-18UNF-3A	23/32	.310	9/16	9/16	25/32	
8	1/2	3/4-16UNF-3A	61/64	.415	3/4	3/4	1-1/64	1/16
10	5/8	7/8-14UNF-3A	1-3/32	.469	7/8	7/8	1-5/32	
12	3/4	1-1/16-12UN-3A	1-9/32	.569	1-1/16	1-1/16	1-11/32	
16	1	1-5/16-12UN-3A	1-33/64	.635	1-5/16	1-5/16	1-41/64	3/32
20	1-1/4	1-5/8-12N-3A	1-43/64	.631	1-5/8	1-5/8	1-51/64	
24	1-1/2	1-7/8-12N-3A	1-55/64	.697	1-7/8	1-7/8	1-63/64	
32	2	2-1/2-UN-3A	2-17/64	.765	2-1/2	2-1/2	2-29/64	1/8

NOTES:
1. FITTINGS SHALL BE FREE FROM ALL HANGING BURRS AND SLIVERS WHICH MIGHT BECOME DISLODGED UNDER USAGE.
2. ALL THREADS PER MIL-S-7742.
3. MAXIMUM SURFACE ROUGHNESS (REF. MIL-STD-10) 125 RHR EXCEPT AS NOTED.

MATERIAL: ADD DD AFTER DASH NO. FOR ALUMINUM ALLOY FORGINGS 2014, SPECIFICATION QQ-A-367, CLASS-5, CONDITION T-6.

ADD C AFTER DASH NO. FOR CORROSION RESISTANT STEEL FORGINGS 321 SPECIFICATION QQ-S-763 CONDITION A.

ADD T AFTER DASH NO. FOR TITANIUM ALLOY FORGINGS 6Al-4V, SPECIFICATION AMS 4928

SURFACE TREATMENT:
ALUMINUM ALLOY: GOLD ANODIZE PER MIL-A-8625, TYPE II
CORROSION RESISTANT STEEL: PASSIVATE PER MIL-S-5002
TITANIUM ALLOY: SURFACE CONVERSION PER VOI-SHAN SPECIFICATION VS-3S-FP-T1

IDENTIFICATION: MARK PART NO. DEPRESSED .020 MAX. INTO PAD SURFACES(S).

EXAMPLE OF CODE:
VSF1011-8DD = CROSS, FLARELESS - ALUMINUM ALLOY, FOR USE WITH 1/2 O.D. TUBING.
VSF1011-12C = CROSS, FLARELESS - CORROSION RESISTANT STEEL, FOR USE WITH 3/4 O.D. TUBING.

DIMENSIONS IN INCHES

PATENT PENDING

APPROVED DATE	TITLE	STANDARD
9 June 1959	CROSS - FLARELESS	VSF 1011
LATEST REVISION DATE	LIGHTWEIGHT	SHEET 1 OF 1
22 September 1959		

VOI-SHAN MANUFACTURING COMPANY
A DIVISION OF VOI-SHAN INDUSTRIES, INC.

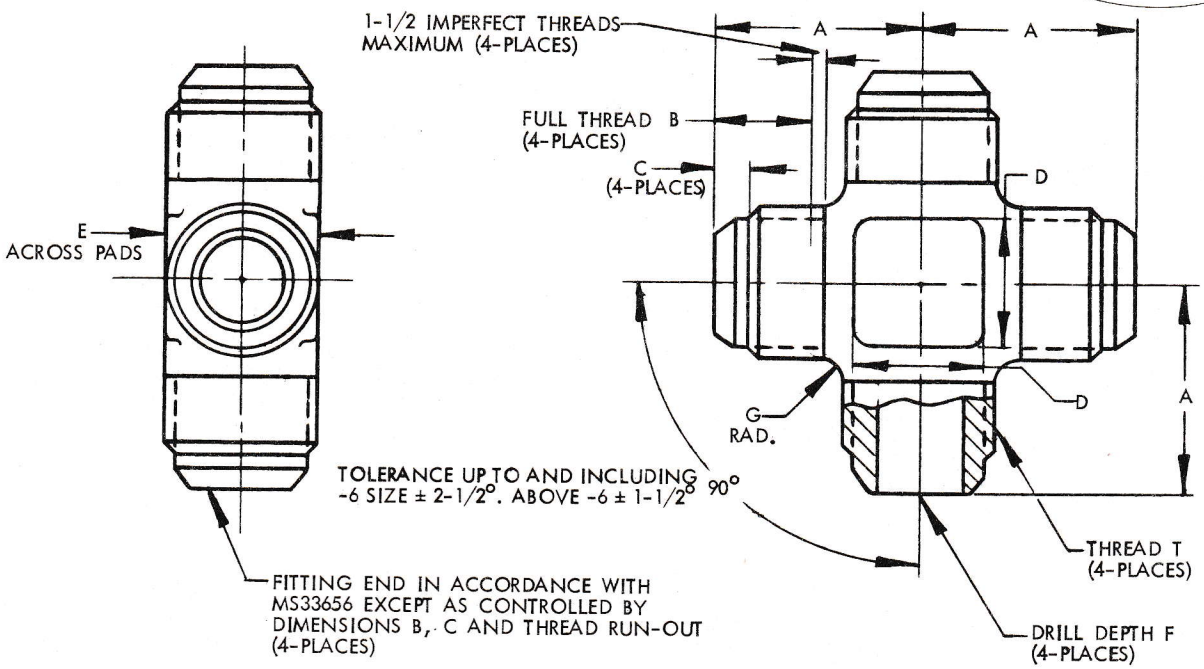

DASH NO.	TUBE SIZE O.D.	THREAD T (MIL-S-7742)	A + 1/32 - 0	B + .030 -.000	C + .015 - .000	D APPROX. WRENCH PADS	E ± 1/64 WRENCH PADS	F + 1/32 - 0	G ± 1/64
4	1/4	7/16-20UNF-3A	11/16	.348	.123	7/16	7/16	47/64	1/32
5	5/16	1/2-20UNF-3A	23/32	.348	.123	1/2	1/2	49/64	
6	3/8	9/16-18UNF-3A	25/32	.369	.119	9/16	9/16	27/32	
8	1/2	3/4-16UNF-3A	1	.448	.167	3/4	3/4	1-1/16	1/16
10	5/8	7/8-14UNF-3A	1-1/8	.490	.169	7/8	7/8	1-3/16	
12	3/4	1-1/16-12UN-3A	1-21/64	.577	.202	1-1/16	1-1/16	1-25/64	
16	1	1-5/16-12UN-3A	1-31/64	.577	.202	1-5/16	1-5/16	1-39/64	3/32
20	1-1/4	1-5/8-12N-3A	1-11/16	.629	.254	1-5/8	1-5/8	1-13/16	
24	1-1/2	1-7/8-12N-3A	1-53/64	.640	.265	1-7/8	1-7/8	1-61/64	
28	1-3/4	2-1/4-12UN-3A	2-3/32	.713	.338	2-1/4	2-1/4	2-7/32	1/8
32	2	2-1/2-12UN-3A	2-1/4	.723	.348	2-1/2	2-1/2	2-7/16	
40	2-1/2	3-12UN-3A	2-1/2	.727	.352	3	3	2-11/16	
48	3	3-1/2-12UN-3A	2-3/4	.727	.352	3-1/2	3-1/2	2-15/16	

NOTES:

1. FITTINGS SHALL BE FREE FROM ALL HANGING BURRS AND SLIVERS WHICH MIGHT BECOME DISLODGED UNDER USAGE.
2. ALL THREADS PER MIL-S-7742 SPECIFICATION.
3. MAXIMUM SURFACE ROUGHNESS (REF. MIL-STD-10) 125 RHR UNLESS OTHERWISE SPECIFIED.

MATERIAL: ADD DD AFTER DASH NO. FOR ALUMINUM ALLOY FORGINGS 2014, SPECIFICATION QQ-A-367, CLASS 5, CONDITION T-6.

ADD C AFTER DASH NO. FOR CORROSION RESISTANT STEEL FORGINGS 321 SPECIFICATION QQ-S-763 CONDITION A.

ADD T AFTER DASH NO. FOR TITANIUM ALLOY FORGINGS 6Al-4V, SPECIFICATION AMS 4928.

SURFACE TREATMENT:
ALUMINUM ALLOY: GOLD ANODIZE PER MIL-A-8625, TYPE II.
CORROSION RESISTANT STEEL: PASSIVATE PER MIL-S-5002
TITANIUM ALLOY: SURFACE CONVERSION PER VOI-SHAN SPECIFICATION VS-3S-FP-T1.

IDENTIFICATION: MARK PART NO. DEPRESSED .020 MAX. INTO PAD SURFACE(S).

EXAMPLE OF CODE:
VSF1012-8DD = CROSS- ALUMINUM ALLOY, FOR USE WITH 1/2 O.D. TUBING.
VSF1012-12T = CROSS- TITANIUM ALLOY, FOR USE WITH 3/4 O.D. TUBING.

DIMENSIONS IN INCHES

PATENT PENDING

APPROVED DATE	TITLE	STANDARD
9 June 1959	CROSS - FLARED	VSF 1012
LATEST REVISION DATE	LIGHTWEIGHT	SHEET 1 OF 1
22 September 1959		

VOI-SHAN MANUFACTURING COMPANY
A DIVISION OF VOI-SHAN INDUSTRIES, INC.

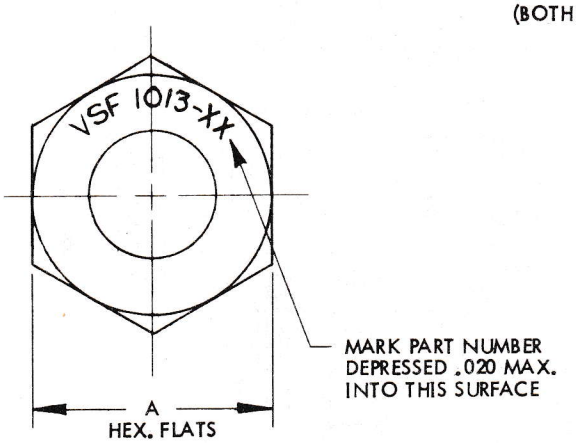

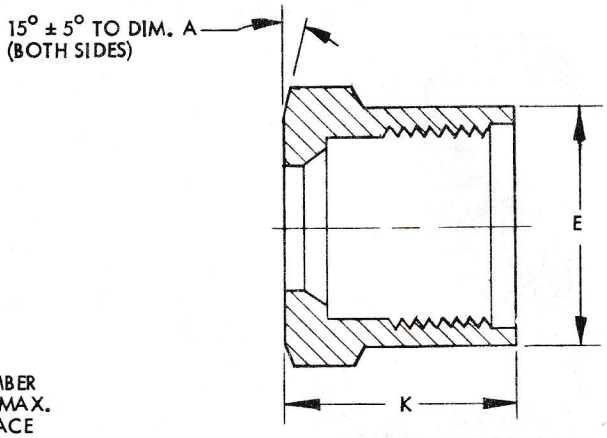

DASH NO.	TUBE SIZE O.D.	THREAD (C)	+.003 A-.004* ±.020**	E ±.005	K
4	1/4	7/16-20 UNF-3B	.562*	.519	.636
5	5/16	1/2-20 UNF-3B	.625*	.582	.636
6	3/8	9/16-18 UNF-3B	.688*	.644	.665
8	1/2	3/4-16 UNF-3B	.875*	.834	.742
10	5/8	7/8-14 UNF-3B	1.000*	.961	.796
12	3/4	1-1/16-12UN-3B	1.250*	1.170	.929
16	1	1-5/16-12UN-3B	1.500**	1.420	.965
20	1-1/4	1-5/8-12N-3B	1.750**	1.733	.992
24	1-1/2	1-7/8-12N-3B	2.000**	1.983	1.013
28	1-3/4	2-1/4-12UN-3B	2.500**	2.368	1.100
32	2	2-1/2-12UN-3B	2.750**	2.618	1.100
40	2-1/2	3-12UN-3B	3.250**	3.118	1.112
48	3	3-1/2-12UN-3B	3.750**	3.618	1.120

NOTES:
(a) MAXIMUM SURFACE ROUGHNESS (REF. MIL-STD. -10) 125 RHR.
(b) NUTS SHALL BE FREE FROM ALL HANGING BURRS AND SLIVERS WHICH MIGHT BECOME DISLODGED UNDER USAGE.
(c) ALL THREADS PER MIL-S-7742 SPECIFICATION.

MATERIAL: ADD DD AFTER DASH NO. FOR ALUMINUM ALLOY 2024-T4.
ADD C AFTER DASH NO. FOR CORROSION RESISTANT STEEL CLASS 321 PER QQ-S-763.
ADD T AFTER DASH NO. FOR TITANIUM ALLOY 6Al-4V STABILIZED ANNEALED PER AMS 4928.

HEAT TREAT:
ALUMINUM ALLOY: AGE TO T6 CONDITION BY HOLDING AT 375°F ± 5°F FOR 12-13 HOURS.
CORROSION RESISTANT STEEL: NONE.
TITANIUM ALLOY: NONE.

SURFACE TREATMENT:
ALUMINUM ALLOY: GOLD ANODIZE PER MIL-A-8625 TYPE II.
CORROSION RESISTANT STEEL: PASSIVATE PER MIL-S-5002.
TITANIUM ALLOY: SURFACE CONVERSION PER VOI-SHAN SPECIFICATION VS-3S-FP-T1.

EXAMPLE OF CODE:
VSF 1013 - 8DD = NUT - ALUMINUM ALLOY, FOR USE WITH 1/2 O.D. TUBING.
VSF 1013 - 12T = NUT - TITANIUM ALLOY, FOR USE WITH 3/4 O.D. TUBING.

DIMENSIONS IN INCHES: TOLERANCE UNLESS OTHERWISE SPECIFIED: FRACTIONS ± 1/64 ANGLES ± 1/2°

PATENT PENDING

APPROVED DATE	TITLE	STANDARD
9 JUNE 1959	NUT LIGHTWEIGHT SHORT THREAD	VSF 1013
LATEST REVISION DATE 16 NOVEMBER 1960		SHEET 1 OF 1

VOI-SHAN MANUFACTURING COMPANY
A DIVISION OF VOI-SHAN INDUSTRIES, INC.

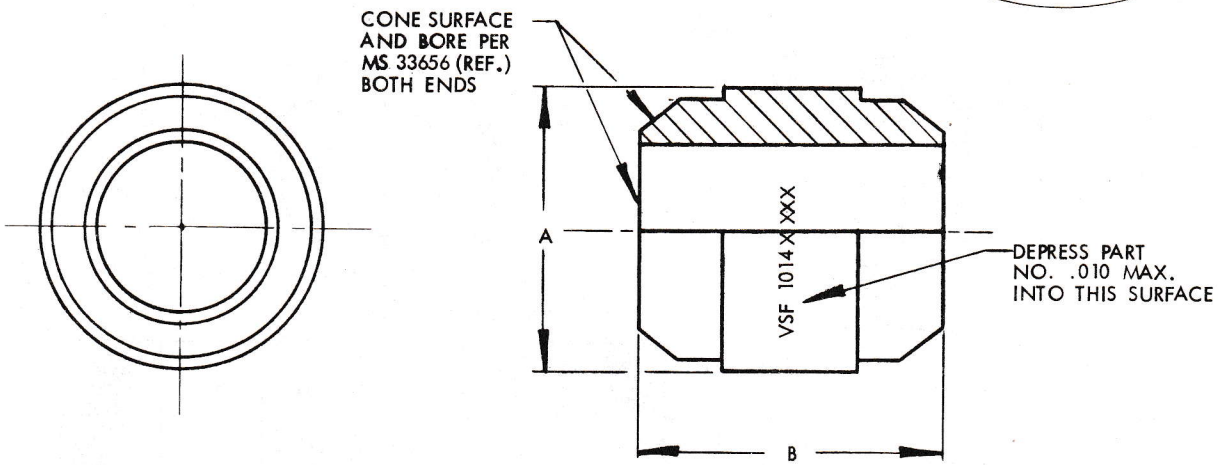

DASH NO.	TUBE SIZE O.D.	A ±.020	B ±.020		
			LONG	MEDIUM	SHORT
-4	1/4	.414	.751	.694	.632
-5	5/16	.477	.779	.722	.662
-6	3/8	.593	.869	.812	.754
-8	1/2	.695	.938	.880	.823
-10	5/8	.805	1.048	.990	.932
-12	3/4	.977	1.048	.990	.932
-16	1	1.226	1.048	.990	.932
-20	1-1/4	1.539	1.160	1.103	1.045
-24	1-1/2	1.789	1.190	1.133	1.075
-28	1-3/4	2.163	1.210	1.153	1.095
-32	2	2.413	1.228	1.171	1.113
-40	2-1/2	2.912	1.228	1.171	1.113
-48	3	3.412	1.228	1.171	1.113

NOTES:
1. INSERTS SHALL BE FREE FROM ALL HANGING BURRS AND SLIVERS WHICH MIGHT BECOME DISLODGED UNDER USAGE.
2. MAXIMUM SURFACE ROUGHNESS (REF. MIL-STD-10) 125 RHR.

ENGINEERING INFORMATION: THIS PART USED ON ASSEMBLY DRAWINGS VSF 2009 AND VSF 2010.

MATERIAL:
ADD DD AFTER DASH NUMBER FOR ALUMINUM ALLOY 2024-T4
ADD T AFTER DASH NUMBER FOR TITANIUM ALLOY 6 Al-4 V STABILIZED ANNEALED PER AMS 4928
ADD C AFTER DASH NUMBER FOR CORROSION RESISTANT STEEL TYPE 321 PER QQ-S-763, CLASS 8

HEAT-TREAT:
ALUMINUM ALLOY: AGE TO T6 CONDITION BY HOLDING AT 375°F ± 5°F FOR 12-13 HOURS.
TITANIUM ALLOY: NONE
CORROSION RESISTANT STEEL: NONE

SURFACE TREATMENT:
ALUMINUM ALLOY: SURFACE CONVERSION PER MIL-C-5541, CLASS I, TYPE II SPECIFICATION.
TITANIUM ALLOY: NONE
CORROSION RESISTANT STEEL: PASSIVATE PER MIL-S-5002

TUBE WALL THICKNESS:
ADD A AFTER BASIC NO. FOR LONG TYPE INSERT USED WITH TUBE WALL THICKNESS .010 TO .035
ADD B AFTER BASIC NO. FOR MEDIUM TYPE INSERT USED WITH TUBE WALL THICKNESS .035 TO .057.
ADD C AFTER BASIC NO. FOR SHORT TYPE INSERT USED WITH TUBE WALL THICKNESS .058 TO .083.

EXAMPLE OF CODE:
VSF 1014B8T INSERT, MEDIUM TYPE-TITANIUM ALLOY, FOR USE WITH 1/2-INCH O.D. TUBING (.035 TO .057 WALL)
VSF 1014A6DD INSERT, LONG TYPE-ALUMINUM ALLOY, FOR USE WITH 3/8-INCH O.D. TUBING (.010 TO .034 WALL)

DIMENSIONS IN INCHES

PATENT PENDING

APPROVED DATE	TITLE	STANDARD
17 November 1959	INSERT - FLARED, CONICAL SEAL	VSF 1014
LATEST REVISION DATE	UNION ASSEMBLY	SHEET 1 OF 1
	SCOTT CONNECTOR SYSTEM	

VOI-SHAN MANUFACTURING COMPANY
A DIVISION OF VOI-SHAN INDUSTRIES, INC.

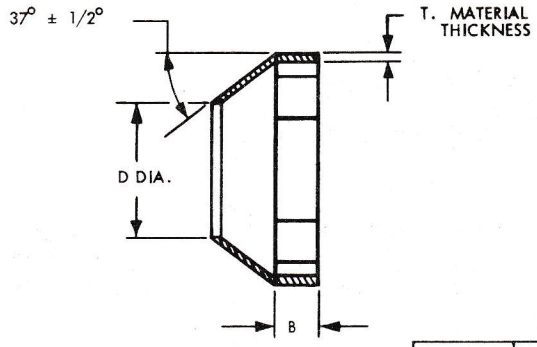

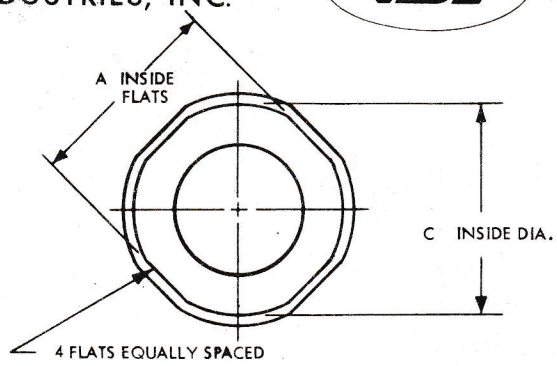

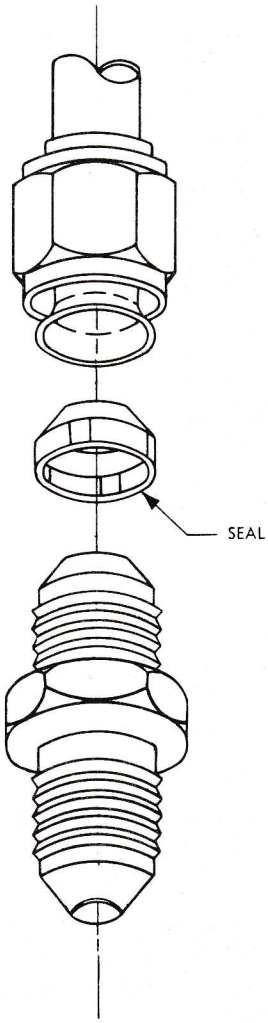

DASH	TUBE SIZE O.D.	A +.005 -.000	B +.000 -.015	C +.005 -.000	D +.015 -.000	T MAT'L. SIZE
2	1/8	.240	.060	.245	.103	
3	3/16	.302		.307	.166	
4	1/4	.354		.359	.213	.005
5	5/16	.416	.075	.421	.275	
6	3/8	.471		.476	.338	
8	1/2	.649	.095	.654	.446	
9	9/16	.717		.722	.529	
10	5/8	.762	.105	.767	.562	
12	3/4	.933		.938	.687	
14	7/8	1.065		1.070	.826	.010
16	1	1.183		1.188	.936	
20	1-1/4	1.496		1.501	1.175	
24	1-1/2	1.745	.125	1.750	1.410	
28	1-3/4	2.120		2.125	1.680	
32	2	2.370		2.375	1.913	
40	2-1/2	2.877		2.882	2.500	
44	2-3/4	3.127	.055	3.132	2.742	.015
47	2-15/16	3.235	.090	3.245	3.015	
48	3	3.377	.055	3.382	2.990	

NOTE: REMOVE ALL SHARP EDGES AND BURRS

MATERIAL: "A" BEFORE DASH NO. INDICATES ALUMINUM ALLOY 1100(2S) SHEET, CONDITION "O" PER QQ-A-561 SPECIFICATION.

"C" BEFORE DASH NO. INDICATES OXYGEN-FREE COPPER STRIP, SOFT-ANNEALED PER QQ-C-576 SPECIFICATION.

"CT" BEFORE DASH NO. INDICATES OXYGEN-FREE COPPER STRIP, SOFT-ANNEALED PER QQ-C-576 SPECIFICATION, TIN-PLATED PER AMS 2408-2.

"N" BEFORE DASH NO. INDICATES LOW-CARBON NICKEL STRIP, ANNEALED PER ASTM-B162-58T SPECIFICATION.

FINISH AND PACKAGING: PARTS TO BE CLEANED AND PACKAGED IN ACCORDANCE WITH VOI-SHAN SPECIFICATION VS-VSF-5-1.

EXAMPLE OF CODE:

VSF 1015 N 12
- DASH NO. (3/4 O.D. TUBE)
- MATERIAL (NICKEL)
- BASIC NO.

VSF 1015 CT 8
- DASH NO. (1/2 O.D. TUBE)
- MATERIAL (TIN PLATED COPPER)
- BASIC NO.

PATENT APPLIED FOR

CODE IDENT. NO. 92215

APPROVED DATE	TITLE	STANDARD
5 NOVEMBER 1959	SEAL - CONICAL FLARED FITTING	VSF 1015
LATEST REVISION DATE 16 JANUARY 1962		SHEET 1 OF 1

VOI-SHAN MANUFACTURING COMPANY
A DIVISION OF VOI-SHAN INDUSTRIES, INC.

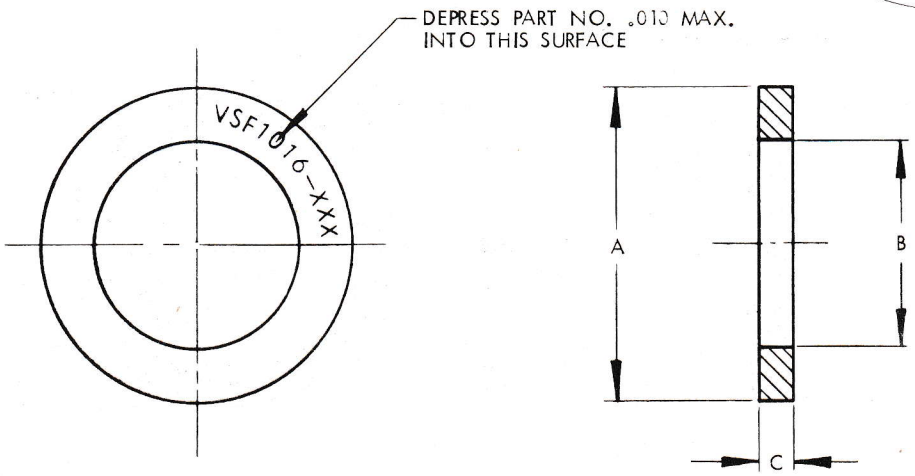

DASH NO.	TUBE SIZE O.D.	A ±.015	B +.010 -.000	C +.015 -.000
-4	1/4	.781	.567	.060
-5	5/16	.843	.630	.060
-6	3/8	.968	.755	.070
-8	1/2	1.093	.880	.080
-10	5/8	1.218	1.005	.100
-12	3/4	1.406	1.192	.100
-16	1	1.750	1.445	.100
-20	1-1/4	2.062	1.758	.100
-24	1-1/2	2.312	2.008	.100
-28	1-3/4	2.687	2.383	.100
-32	2	2.937	2.633	.100
-36	2-1/4	3.250	2.885	.100
-40	2-1/2	3.500	3.135	.100
-48	3	4.000	3.635	.100
-56	3-1/2	4.375	4.010	.100
-64	4	4.875	4.510	.100

NOTES:

1. SPACERS SHALL BE FREE FROM ALL HANGING BURRS AND SLIVERS WHICH MIGHT BECOME DISLODGED UNDER USAGE.
2. MAXIMUM SURFACE ROUGHNESS (REF. MIL-STD-10) 125 RMS.

ENGINEERING INFORMATION: THIS PART USED ON ASSEMBLY DRAWINGS VSF 2002 THRU VSF 2004

MATERIAL:
ADD DD AFTER DASH NUMBER FOR ALUMINUM ALLOY 2024-T4.
ADD T AFTER DASH NUMBER FOR TITANIUM ALOY 6Al-4V STABILIZED ANNEALED PER AMS 4928.
ADD C AFTER DASH NUMBER FOR CORROSION RESISTANT STEEL TYPE 321, PER QQ-S-763, CLASS 3.

HEAT-TREAT:
ALUMINUM ALLOY: AGE TO T6 CONDITION BY HOLDING AT 375°F ± 5°F FOR 12 - 13 HOURS.
TITANIUM ALLOY: NONE
CORROSION RESISTANT STEEL: NONE

SURFACE FINISH:
ALUMINUM ALLOY: GOLD ANODIZE PER MIL-A-8625 TYPE II.
TITANIUM ALLOY: SURFACE CONVERSION PER VOI-SHAN SPECIFICATION VS-3S-FP-T1.
CORROSION RESISTANT STEEL: PASSIVATE PER MIL-S-5002.

EXAMPLE OF CODE:
VSF 1005-8DD = COUPLING ALUMINUM ALLOY, FOR USE WITH 1/2-O.D. TUBING
VSF 1005-12T = TITANIUM ALLOY, FOR USE WITH 3/4-O.D. TUBING
VSF 1005-16C = COUPLING, CORROSION-RESISTANT STEL, FOR USE WITH 1-O.D. TUBING

DIMENSIONS IN INCHES

PATENT PENDING

APPROVED DATE	TITLE	STANDARD
11 September 1959	SPACER - BULKHEAD UNION ASSEMBLY SCOTT CONNECTOR SYSTEM	VSF 1016
LATEST REVISION DATE		SHEET 1 OF 1

VOI-SHAN MANUFACTURING COMPANY
A DIVISION OF VOI-SHAN INDUSTRIES, INC.

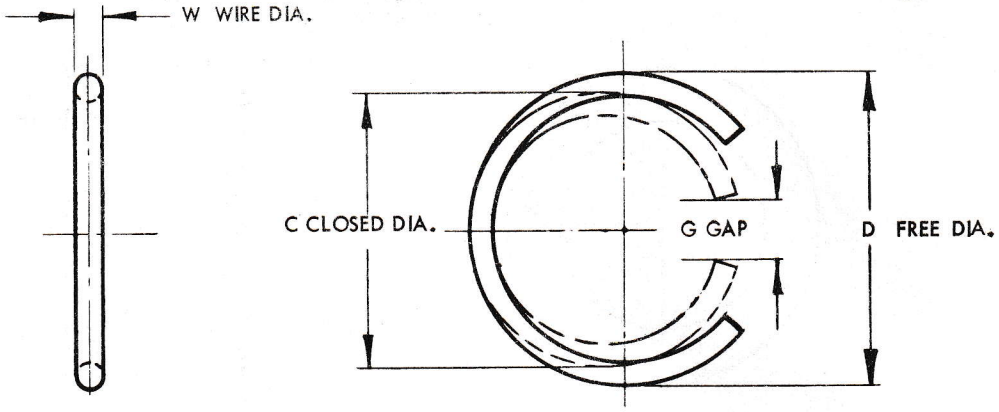

DASH NO.	TUBE SIZE O.D.	C DIA. REF.	W WIRE DIA.	D FREE DIA.		G GAP REF.
4	1/4	.416	.041	.457	±.017	1/16
5	5/16	.479	.041	.520		
6	3/8	.595	.041	.636		
8	1/2	.698	.041	.739		
10	5/8	.807	.041	.848		1/8
12	3/4	.980	.041	1.021		
16	1	1.229	.041	1.270		
20	1-1/4	1.542	.064	1.670	±.032	
24	1-1/2	1.792	.064	1.920		
28	1-3/4	2.167	.064	2.295		
32	2	2.417	.064	2.545		
40	2-1/2	2.917	.064	3.045		
48	3	3.417	.064	3.545		

NOTE: REMOVE ALL BURRS AND SHARP EDGES

MATERIAL: INCONEL X WIRE, NO. 1 TEMPER. PER AMS 5698

HEAT-TREATMENT: NONE

FINISH: PASSIVATE PER MIL-S-5002

EXAMPLE OF CODE: VSF 1017-10 - SNAP RING, FLARED INSERT, FOR USE WITH 5/8 O.D. TUBING

THIS SNAP-RING IS INTENDED FOR USE WITH THE VSF 1003 AND VS 1020 INSERTS

DIMENSIONS IN INCHES

APPROVED DATE	TITLE	STANDARD
3 August 1960	SNAP-RING - FLARED INSERT UNION ASSEMBLY SCOTT CONNECTOR SYSTEM	VSF 1017
LATEST REVISION DATE AUGUST 19, 1960		SHEET 1 OF 1

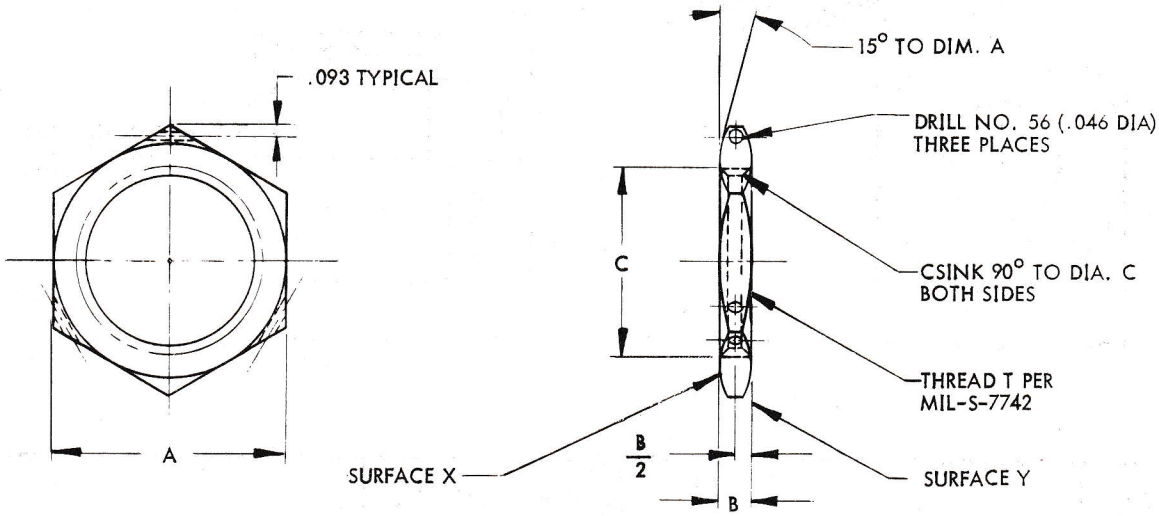

DASH NO.	TUBING O.D.	THREAD T	A	B	C	WEIGHT
2	1/8	5/16-24UNF-3B	.563+.003 -.004	.125	.313	
3	3/16	3/8-24UNF-3B	.625+.003 -.004	.125	.375	
4	1/4	7/16-20UNF-3B	.688+.003 -.004	.125	.438	
5	5/16	1/2-20UNF-3B	.750+.003 -.004	.125	.500	
6	3/8	9/16-18UNF-3B	.813+.003 -.004	.133	.562	
8	1/2	3/4-16UNF-3B	1.000+.003 -.004	.156	.750	
10	5/8	7/8-14UNF-3B	1.125+.003 -.004	.179	.875	
12	3/4	1 1/16-12UN-3B	1.375+.003 -.004	.203	1.062	
16	1	1 5/16-12UN-3B	1.625±.016	.203	1.312	
20	1 1/4	1 5/8-12N-3B	1.938±.016	.203	1.625	
24	1 1/2	1 7/8-12N-3B	2.188±.020	.203	1.875	
28	1 3/4	2 1/4-12UN-3B	2.563±.020	.203	2.250	
32	2	2 1/2-12UN-3B	2.813±.020	.203	2.500	
36	2 1/4	2 3/4-12UN-3B	3.068±.020	.203	2.750	
40	2 1/2	3 -12UN-3B	3.312±.020	.203	3.000	
48	3	3 1/2-12UN-3B	3.812±.020	.203	3.500	
56	3 1/2	4 -12UN-3B	4.312±.020	.203	4.000	
64	4	4 1/2-12UN-3B	4.813±.020	.203	4.500	

MATERIAL: TITANIUM 6AL 4V - MATERIAL MUST BE STABILIZED ANNEALED CONDITION, PER VS 1S 1.2.

PROCUREMENT SPEC: MIL-F-5509, AS APPLICABLE.

FINISH: SIDE CUT DOWN TO BE SMOOTH MACHINE FINISH 63√ NO PROTECTIVE FINISH REQUIRED.

CODE: DASH NUMBER DESIGNATES TUBE SIZES AS LISTED IN THE ABOVE TABLE.
ADD "H" AFTER DASH SIZE TO INDICATE LOCK WIRE HOLES.

EXAMPLES: VSF1018-4, 7/16-20 NUT, TITANIUM.
VSF1018-4H, 7/16-20 NUT, TITANIUM WITH LOCK WIRE HOLES

TOLERANCES: UNLESS OTHERWISE SPECIFIED, DECIMALS ±.010, ANGLES ± 1/2 DEG.

IDENTIFICATION: PART NUMBER TO BE RUBBER STAMPED ON HEX FLATS

NOTES:
1. THESE PARTS ARE INTENDED FOR USE IN AND10064 INSTALLATIONS WHEREIN BULKHEAD THICKNESS DOES NOT ALLOW USE OF AN 924.
2. REMOVE ALL BURRS AND SHARP EDGES.
3. PITCH DIA. OF THD. TO BE SQUARE WITH SURFACES X & Y WITHIN .005 T.I.R.

APPROVED DATE August 25, 1958 REVISION DATE

VOI-SHAN Manufacturing Company
a division of PHEOLL MANUFACTURING COMPANY

TITLE
NUT - BULKHEAD FITTING
TITANIUM
6AL - 4V

STANDARD
VSF 1018
SHEET 1 OF 1

VOI-SHAN MANUFACTURING COMPANY
A DIVISION OF VOI-SHAN INDUSTRIES, INC.

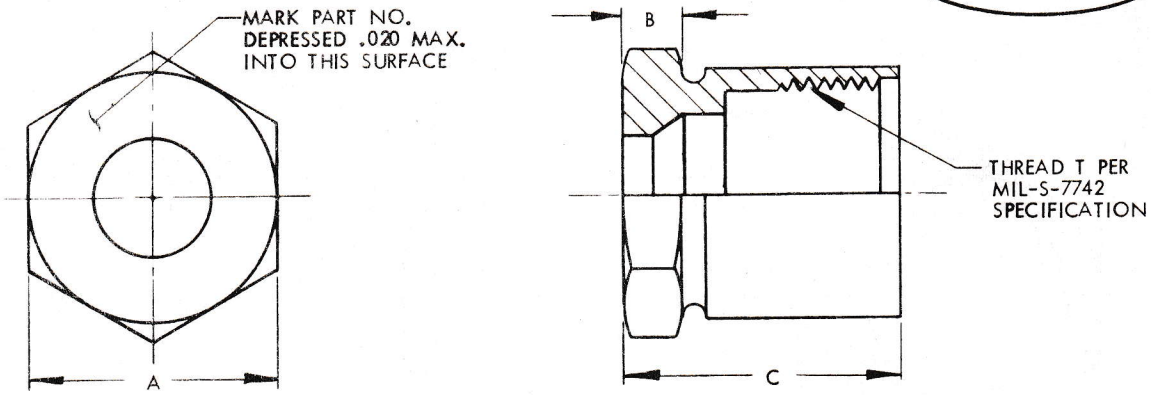

DASH NO.	TUBE SIZE O.D. SIZE LARGE	TUBE SIZE O.D. SIZE SMALL	THREAD T MIL-S-7742	A HEX. FLATS		B ±.020	C ±.020
5-4	5/16	1/4	5/8-18UNF-3B	.750		.187	1.000
6-4	3/8	1/4	3/4-16UNF-3B	.875		.187	1.077
6-5	3/8	5/16	3/4-16UNF-3B	.875		.187	1.077
8-4	1/2	1/4	7/8-14UNF-3B	1.000		.218	1.088
8-5	1/2	5/16	7/8-14UNF-3B	1.000	+.003	.218	1.088
8-6	1/2	3/8	7/8-14UNF-3B	1.000	-.004	.218	1.088
10-5	5/8	5/16	1-12UNF-3B	1.125		.218	1.175
10-6	5/8	3/8	1-12UNF-3B	1.125		.218	1.175
10-8	5/8	1/2	1-12UNF-3B	1.125		.218	1.175
12-6	3/4	3/8	1-3/16-12UN-3B	1.312		.250	1.200
12-8	3/4	1/2	1-3/16-12UN-3B	1.312		.250	1.200
12-10	3/4	5/8	1-3/16-12UN-3B	1.312		.250	1.200
16-8	1	1/2	1-7/16-12UN-3B	1.562		.250	1.270
16-10	1	5/8	1-7/16-12UN-3B	1.562		.250	1.270
16-12	1	3/4	1-7/16-12UN-3B	1.562	±.016	.250	1.270
20-10	1-1/4	5/8	1-3/4-12UN-3B	1.875		.265	1.320
20-12	1-1/4	3/4	1-3/4-12UN-3B	1.875		.265	1.320
20-16	1-1/4	1	1-3/4-12UN-3B	1.875		.265	1.320

DASH NO.	TUBE SIZE O.D. SIZE LARGE	TUBE SIZE O.D. SIZE SMALL	THREAD T MIL-S-7742	A HEX. FLATS		B ±.020	C ±.020
24-12	1-1/2	3/4	2-12UN-3B	2.125		.265	1.370
24-16	1-1/2	1	2-12UN-3B	2.125		.265	1.370
24-20	1-1/2	1-1/4	2-12UN-3B	2.125		.265	1.370
28-16	1-3/4	1	2-3/8-12N-3B	2.500		.281	1.400
28-20	1-3/4	1-1/4	2-3/8-12N-3B	2.500		.281	1.400
28-24	1-3/4	1-1/2	2-3/8-12N-3B	2.500		.281	1.400
32-16	2	1	2-5/8-12N-3B	2.750		.281	1.400
32-20	2	1-1/4	2-5/8-12N-3B	2.750		.281	1.400
32-24	2	1-1/2	2-5/8-12N-3B	2.750	±.020	.281	1.400
32-28	2	1-3/4	2-5/8-12N-3B	2.750		.281	1.400
40-20	2-1/2	1-1/4	3-1/8-12N-3B	3.250		.296	1.400
40-24	2-1/2	1-1/2	3-1/8-12N-3B	3.250		.296	1.400
40-28	2-1/2	1-3/4	3-1/8-12N-3B	3.250		.296	1.400
40-32	2-1/2	2	3-1/8-12N-3B	3.250		.296	1.400
48-24	3	1-1/2	3-5/8-12N-3B	3.750		.312	1.400
48-28	3	1-3/4	3-5/8-12N-3B	3.750		.312	1.400
48-32	3	2	3-5/8-12N-3B	3.750		.312	1.400
48-40	3	2-1/2	3-5/8-12N-3B	3.750		.312	1.400

NOTES:
1. NUTS SHALL BE FREE FROM ALL HANGING BURRS AND SLIVERS WHICH MIGHT BECOME DISLODGED UNDER USAGE.
2. MAXIMUM SURFACE ROUGHNESS (REF. MIL-STD-10) 125 RHR.

ENGINEERING INFORMATION: THIS PART USED ON ASSEMBLY DRAWINGS VSF 2005 THROUGH VSF 2008.

MATERIAL:
ADD DD AFTER SECOND DASH NUMBER FOR ALUMINUM ALLOY 2024-T4
ADD T AFTER SECOND DASH NUMBER FOR TITANIUM ALLOY 6Al-4V STABILIZED ANNEALED PER AMS 4928
ADD C AFTER SECOND DASH NUMBER FOR CORROSION-RESISTANT STEEL CLASS 321 PER QQ-S-763.

HEAT-TREAT:
ALUMINUM ALLOY: AGE TO T6 CONDITION BY HOLDING AT 375°F ± 5°F FOR 12-13 HOURS.
TITANIUM ALLOY: NONE
CORROSION-RESISTANT STEEL: NONE

SURFACE TREATMENT:
ALUMINUM ALLOY: GOLD ANODIZE PER MIL-A-8625 TYPE II
TITANIUM ALLOY: SURFACE CONVERSION PER VOI-SHAN SPECIFICATION VS-3S-FP-TI.
CORROSION RESISTANT STEEL: PASSIVATE PER MIL-S-5002

EXAMPLE OF CODE:
VSF 1019-10-8DD NUT - ALUMINUM ALLOY, FOR REDUCING 5/8 O.D. TUBING TO 1/2 O.D. TUBING

VSF 1019-20-12T NUT-TITANIUM ALLOY, FOR REDUCING 1-1/4 O.D. TUBING TO 3/4 O.D. TUBING

DIMENSIONS IN INCHES

PATENT PENDING

APPROVED DATE	TITLE	STANDARD
25 January 1960	NUT - REDUCING	VSF 1019
LATEST REVISION DATE 23 June 1960	UNION ASSEMBLY	SHEET 1 OF 1
	SCOTT CONNECTOR SYSTEM	

VOI-SHAN MANUFACTURING COMPANY
A DIVISION OF VOI-SHAN INDUSTRIES, INC.

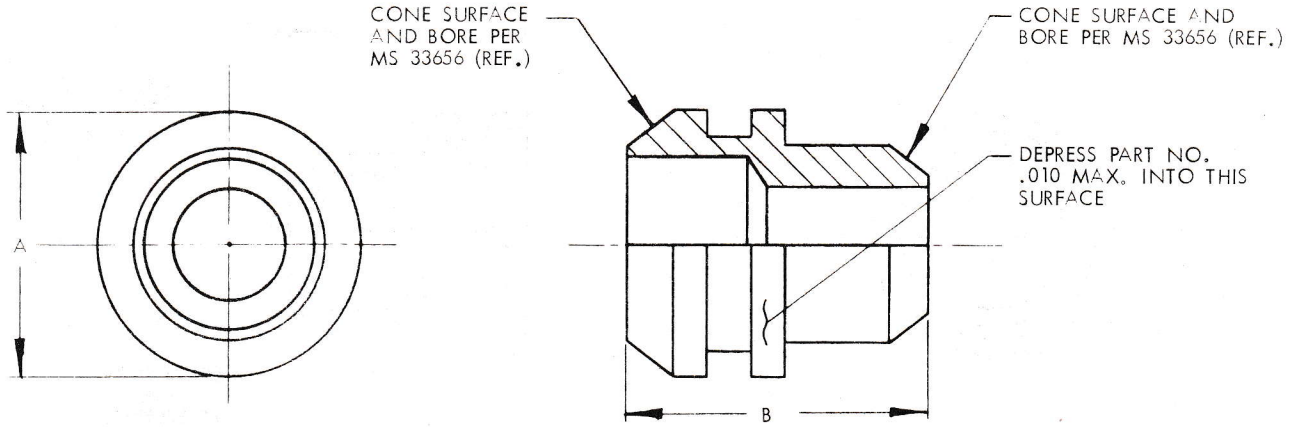

DASH NO.	TUBING SIZE O.D. (REF.)		A ±.020	B ±.020		
	LARGE	SMALL		LONG	MEDIUM	SHORT
5-4	5/16	1/4	.477	.790	.732	.672
6-4	3/8	1/4	.593	.878	.820	.760
6-5	3/8	5/16	.593	.878	.820	.760
8-4	1/2	1/4	.695	.931	.873	.814
8-5	1/2	5/16	.695	.931	.873	.814
8-6	1/2	3/8	.695	.931	.873	.814
10-5	5/8	3/16	.805	1.038	.980	.921
10-6	5/8	3/8	.805	1.038	.980	.921
10-8	5/8	1/2	.805	1.066	1.008	.950
12-6	3/4	3/8	.977	1.049	.991	.933
12-8	3/4	1/2	.977	1.078	1.020	.962
12-10	3/4	3/8	.977	1.080	1.022	.964
16-8	1	1/2	1.226	1.113	1.055	.997
16-10	1	5/8	1.226	1.115	1.057	.999
16-12	1	3/4	1.226	1.102	1.044	.986
20-10	1-1/4	5/8	1.539	1.197	1.139	1.081
20-12	1-1/4	3/4	1.539	1.184	1.126	1.068
20-16	1-1/4	1	1.539	1.149	1.091	1.033

DASH NO.	TUBING SIZE O.D. (REF.)		A ±.020	B ±.020		
	LARGE	SMALL		LONG	MEDIUM	SHORT
24-12	1-1/2	3/4	1.789	1.224	1.166	1.108
24-16	1-1/2	1	1.789	1.189	1.131	1.073
24-20	1-1/2	1-1/4	1.789	1.221	1.163	1.105
28-16	1-3/4	1	2.163	1.214	1.156	1.098
28-20	1-3/4	1-1/4	2.163	1.246	1.188	1.130
28-24	1-3/4	1-1/2	2.163	1.236	1.178	1.120
32-16	2	1	2.413	1.224	1.166	1.108
32-20	2	1-1/4	2.413	1.256	1.198	1.140
32-24	2	1-1/2	2.413	1.246	1.188	1.130
32-28	2	1-3/4	2.413	1.241	1.183	1.125
40-20	2-1/2	1-1/4	2.912	1.256	1.198	1.140
40-24	2-1/2	1-1/2	2.912	1.246	1.188	1.130
40-28	2-1/2	1-3/4	2.912	1.241	1.183	1.125
40-32	2-1/2	2	2.912	1.251	1.193	1.135
48-24	3	1-1/2	3.412	1.246	1.188	1.130
48-28	3	1-3/4	3.412	1.241	1.183	1.125
48-32	3	2	3.412	1.251	1.193	1.135
48-40	3	2-1/2	3.412	1.251	1.193	1.135

NOTES:
1. INSERTS SHALL BE FREE FROM ALL HANGING BURRS AND SLIVERS WHICH MIGHT BECOME DISLODGED UNDER USAGE.
2. MAXIMUM SURFACE ROUGHNESS (REF. MIL-STD-10) 125 RHR.

ENGINEERING INFORMATION: THIS PART USED ON ASSEMBLY DRAWING VSF 2006 AND VSF 2008.

MATERIAL:
ADD DD AFTER SECOND DASH NUMBER FOR ALUMINUM ALLOY 2024-T4
ADD T AFTER SECOND DASH NUMBER FOR TITANIUM ALLOY 6Al-4V STABILIZED ANNEALED PER AMS 4928
ADD C AFTER SECOND DASH NUMBER FOR CORROSION RESISTANT STEEL CLASS 321 PER QQ-S-763

HEAT-TREAT:
ALUMINUM ALLOY: AGE TO T6 CONDITION BY HOLDING AT 375°F ± 5°F FOR 12-13 HOURS.
TITANIUM ALLOY: NONE
CORROSION RESISTANT STEEL: NONE

SURFACE TREATMENT:
ALUMINUM ALLOY: SURFACE CONVERSION PER MIL-C-5541, CLASS I, TYPE II SPECIFICATION
TITANIUM ALLOY: NONE
CORROSION RESISTANT STEEL: PASSIVATE PER MIL-S-5002

TUBE WALL THICKNESS:
ADD A AFTER BASIC NO. FOR LONG TYPE INSERT USED WITH TUBE WALL THICKNESS .010 TO .035.
ADD B AFTER BASIC NO. FOR MEDIUM TYPE INSERT USED WITH TUBE WALL THICKNESS .035 TO .057.
ADD C AFTER BASIC NO. FOR SHORT TYPE INSERT USED WITH TUBE WALL THICKNESS .058 TO .083.

EXAMPLE OF CODE:
VSF 1020 B 10 - 6DD INSERT, MEDIUM TYPE - ALUMINUM ALLOY, FOR REDUCING 5/8 O.D. TUBING (.035 TO .057 WALL) TO 3/8 O.D. TUBING (.035 TO .057 WALL)
VSF 1020 A 8 - 4T INSERT, LONG TYPE - TITANIUM ALLOY, FOR REDUCING 1/2 O.D. TUBING (.010 TO .035 WALL) TO 1/4 O.D. TUBING (.010 TO .035 WALL)

APPROVED DATE	TITLE	STANDARD
25 January 1960	INSERT - REDUCING, FLARED	VSF 1020
LATEST REVISION DATE	UNION ASSEMBLY	SHEET 1 OF 1
	SCOTT CONNECTOR SYSTEM	

VOI-SHAN MANUFACTURING COMPANY
A DIVISION OF VOI-SHAN INDUSTRIES, INC.

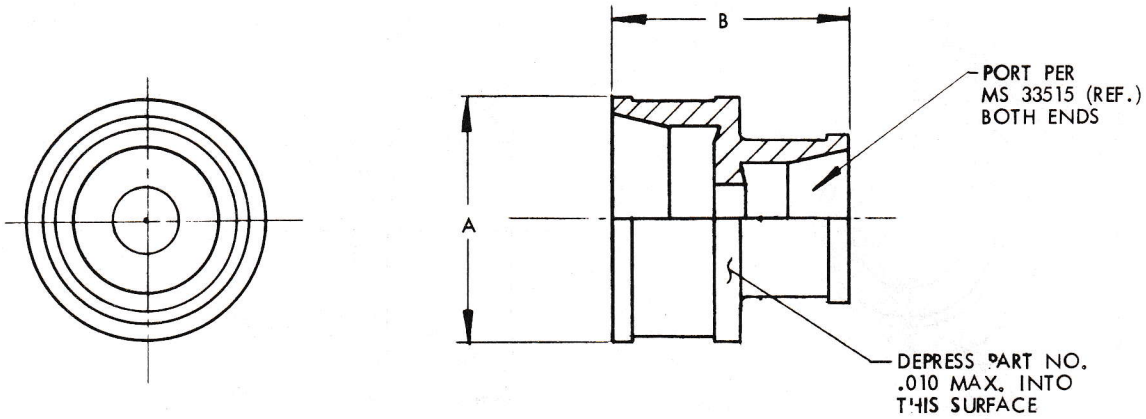

DASH NO.	TUBING SIZE O.D. (REF.)		A	B
	LARGE	SMALL	±.020	±.020
5-4	5/16	1/4	.477	.645
6-4	3/8	1/4	.593	.689
6-5	3/8	5/16	.593	.692
8-4	1/2	1/4	.695	.757
8-5	1/2	5/16	.695	.760
8-6	1/2	3/8	.695	.716
10-5	5/8	5/16	.805	.865
10-6	5/8	3/8	.805	.821
10-8	5/8	1/2	.805	.864
12-6	3/4	3/8	.977	.829
12-8	3/4	1/2	.977	.872
12-10	3/4	5/8	.977	.872

DASH NO.	TUBING SIZE O.D. (REF.)		A	B
	LARGE	SMALL	±.020	±.020
16-8	1	1/2	1.226	.972
16-10	1	5/8	1.226	.972
16-12	1	3/4	1.226	.955
20-10	1-1/4	5/8	1.539	.998
20-12	1-1/4	3/4	1.539	.981
20-16	1-1/4	1	1.539	1.011
24-12	1-1/2	3/4	1.789	1.076
24-16	1-1/2	1	1.789	1.106
24-20	1-1/2	1-1/4	1.789	1.082
32-16	2	1	2.413	1.125
32-20	2	1-1/4	2.413	1.101
32-24	2	1-1/2	2.413	1.146

NOTES:
1. INSERTS SHALL BE FREE FROM ALL HANGING BURRS AND SLIVERS WHICH MIGHT BECOME DISLODGED UNDER USAGE.
2. MAXIMUM SURFACE ROUGHNESS (REF. MIL-STD-10) 125 RHR.

ENGINEERING INFORMATION: THIS PART USED ON ASSEMBLY DRAWINGS VSF 2005 AND VSF 2007.

MATERIAL:
ADD DD AFTER SECOND DASH NUMBER FOR ALUMINUM ALLOY 2024-T4.
ADD T AFTER SECOND DASH NUMBER FOR TITANIUM ALLOY 6AI-4V STABILIZED ANNEALED PER AMS 4928.
ADD C AFTER SECOND DASH NUMBER FOR CORROSION-RESISTANT STEEL CLASS 321 PER QQ-S-763

HEAT TREAT:
ALUMINUM ALLOY: AGE TO T6 CONDITION BY HOLDING AT 375°F ± 5°F FOR 12-13 HOURS.
TITANIUM ALLOY: NONE
CORROSION-RESISTANT STEEL: NONE

SURFACE TREATMENT:
ALUMINUM ALLOY: SURFACE CONVERSION PER MIL-C-5541, CLASS 1, TYPE II SPECIFICATION.
TITANIUM ALLOY: NONE
CORROSION RESISTANT STEEL: PASSIVATE PER MIL-S-5002

EXAMPLE OF CODE:
VSF 1021-10-8DD INSERT-ALUMINUM ALLOY FOR REDUCING 5/8 O.D. TUBING TO 1/2 O.D. TUBING
VSF 1021-24-12T INSERT - TITANIUM ALLOY FOR REDUCING 1-1/2 O.D. TUBING TO 3/4 O.D. TUBING.

DIMENSIONS IN INCHES

PATENT PENDING

APPROVED DATE	TITLE	STANDARD
8 February 1960	INSERT - REDUCING, FLARELESS UNION ASSEMBLY SCOTT CONNECTOR SYSTEM	VSF 1021
LATEST REVISION DATE		SHEET 1 OF 1

VOI-SHAN MANUFACTURING COMPANY
A DIVISION OF VOI-SHAN INDUSTRIES, INC.

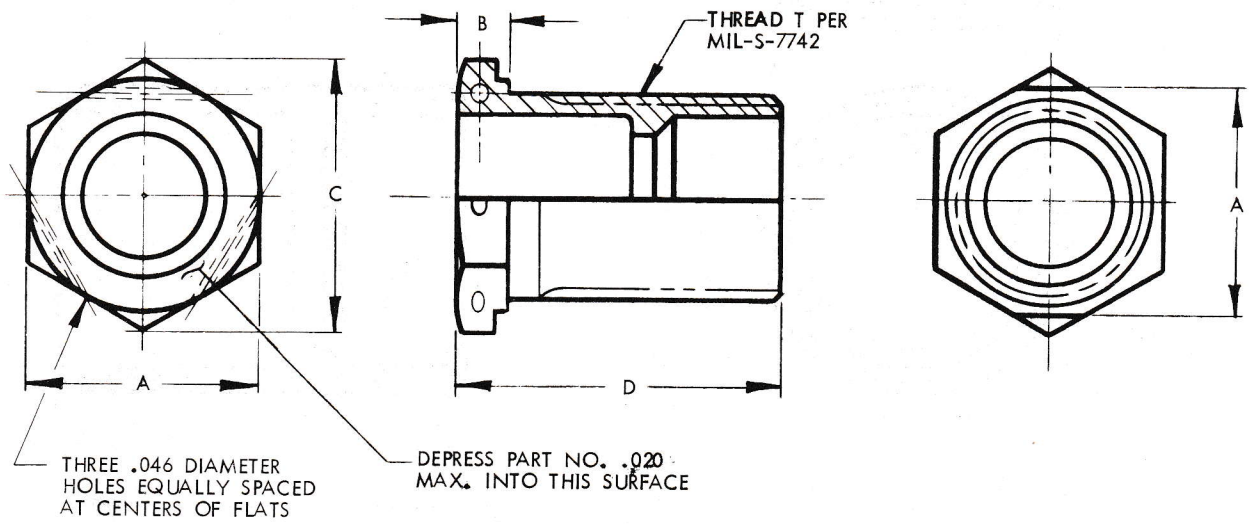

DASH NO.	TUBE SIZE O.D.	THREAD T (MIL-S-7742)	A HEX. FLATS		B ±.020	C (REF.)	D ±.020
6	3/8	3/4-16 UNF-3A	1.000	+.003 -.004	.187	1.155	1.430
8	1/2	7/8-14 UNF-3A	1.125		.218	1.300	1.530
12	3/4	1-3/16 UN-3A	1.437		.250	1.660	1.730
16	1	1-7/16 UN-3A	1.812	±.016	.250	2.093	1.730

NOTES:
1. COUPLINGS SHALL BE FREE FROM ALL HANGING BURRS AND SLIVERS WHICH MIGHT BECOME DISLODGED UNDER USAGE.
2. MAXIMUM SURFACE ROUGHNESS (REF. MIL-STD-10) 125 RMS.

MATERIAL: CORROSION-RESISTING STEEL CLASS 321 PER QQ-S-763

FINISH: PASSIVATE PER MIL-S-5002

CODE: VSF 1053 - 12
- 12 — DASH NO. (TUBE O.D. IN SIXTEENTHS)
- VSF 1053 — BASIC PART NO.

DIMENIONS IN INCHES

UNLESS OTHERWISE SPECIFIED, TOLERANCES: DECIMALS ± .010, ANGLES ± 5°

APPROVED DATE	TITLE	STANDARD
12 February 1960	NUT - TUBE, COUPLING	VSF 1053
LATEST REVISION DATE	G - E SPECIAL	SHEET 1 OF 1

VOI-SHAN MANUFACTURING COMPANY
A DIVISION OF VOI-SHAN INDUSTRIES, INC.

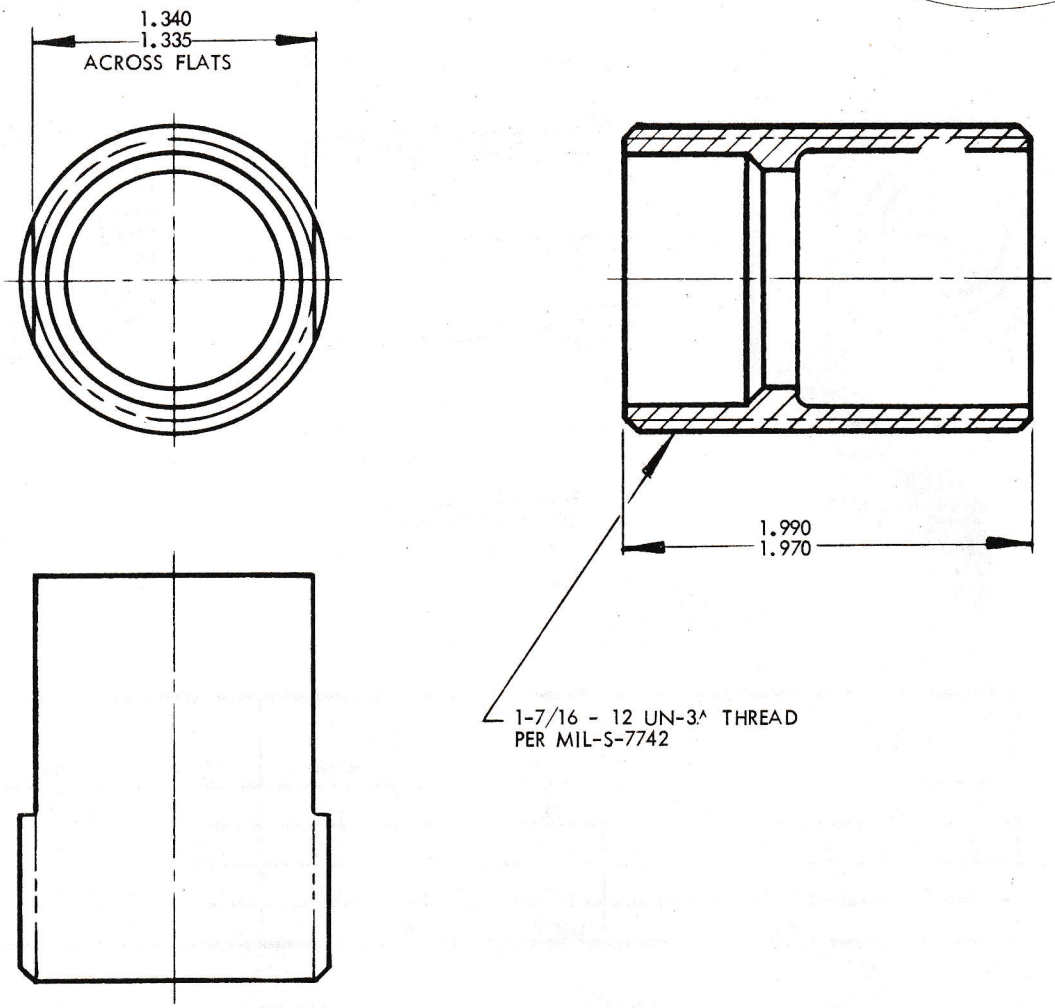

NOTES:

1. PARTS SHALL BE FREE FROM ALL HANGING BURRS AND SLIVERS WHICH MIGHT BECOME DISLODGED UNDER USAGE.
2. MAXIMUM SURFACE ROUGHNESS (REF. MIL-STD-10) 125 RMS.

MATERIAL: CORROSION-RESISTANT STEEL CLASS 321, PER QQ-S-763

FINISH: PASSIVATE PER MIL-S-5002

DIMENSIONS IN INCHES

UNLESS OTHERWISE SPECIFIED, TOLERANCES: DECIMALS ± .010, ANGLES ± 5°

APPROVED DATE	TITLE	STANDARD
12 February 1960	NIPPLE - TUBE	VSF 1054
LATEST REVISION DATE	- E SPECIAL	SHEET 1 OF 1

VOI-SHAN MANUFACTURING COMPANY
A DIVISION OF VOI-SHAN INDUSTRIES, INC.

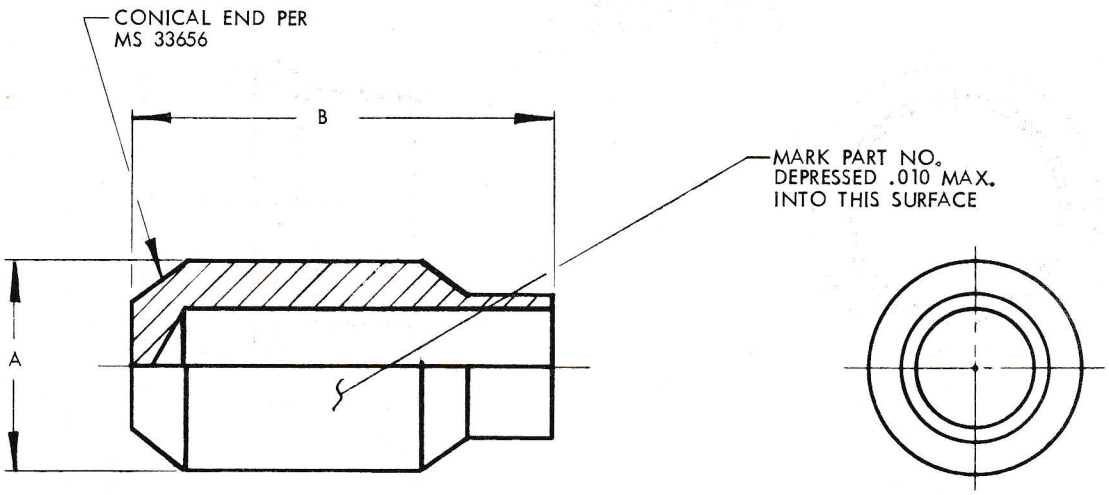

DASH NO.	TUBE SIZE O.D.	A ±.020	B .±.020
4	1/4	.414	1.103
5	5/16	.477	1.132
6	3/8	.593	1.221
8	1/2	.695	1.304
10	5/8	.805	1.412
12	3/4	.977	1.439
16	1	1.226	1.475
20	1-1/4	1.539	1.572
24	1-1/2	1.789	1.612
28	1-3/4	2.163	1.652
32	2	2.413	1.661
40	2-1/2	2.912	1.661
48	3	3.412	1.661

NOTES:
1. PLUGS SHALL BE FREE FROM HANGING BURRS AND SLIVERS
2. MAXIMUM SURFACE ROUGHNESS (REF. MIL-STD-10) 125 RHR

MATERIAL: ADD DD AFTER DASH NO. FOR ALUMINUM ALLOY 2024-T4
ADD T AFTER DASH NO. FOR TITANIUM ALLOY 6 AL-4V STABILIZED ANNEALED PER AMS 4928
ADD C AFTER DASH NO. FOR CORROSION RESISTANT STEEL TYPE 321 PER QQ-S-763, CLASS 8

HEAT-TREAT:
ALUMINUM ALLOY: AGE TO T6 CONDITION BY HOLDING AT 375°F ± 5°F FOR 12-13 HOURS
TITANIUM ALLOY: NONE
CORROSION RESISTANT STEEL: NONE

SURFACE TREATMENT:
ALUMINUM ALLOY: SURFACE CONVERSION PER MIL-C-5541, CLASS 1, TYPE II
TITANIUM ALLOY: SURFACE CONVERSION PER VOI-SHAN SPECIFICATION VS-3S-FP-Ti
STEEL: PASSIVATE PER MIL-S-5002

EXAMPLE OF CODE:
VSF 1055-4C = FLARED PLUG, CORROSION RESISTANT STEEL, FOR USE WITH 1/4 O.D. TUBING
VSF 1055-20DD = FLARED PLUG, ALUMINUM ALLOY, FOR USE WITH 1-1/4 O.D. TUBING

DIMENSIONS IN INCHES

PATENT PENDING

APPROVED DATE	TITLE	STANDARD
15 July 1960	PLUG - FLARED UNION ASSEMBLY SCOTT CONNECTOR SYSTEM	VSF 1055
LATEST REVISION DATE		SHEET 1 OF 1

VOI-SHAN MANUFACTURING COMPANY
A DIVISION OF VOI-SHAN INDUSTRIES, INC.

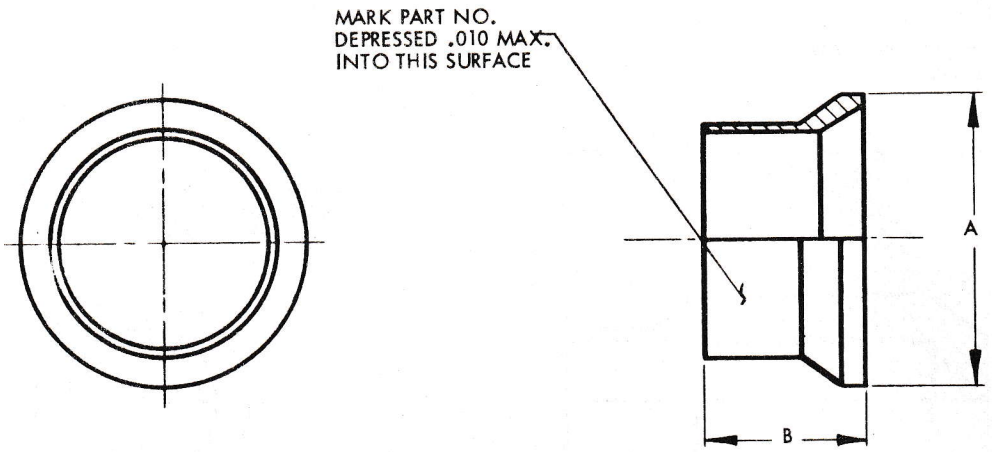

DASH NO.	TUBE SIZE O.D.	A ±.020	B ±.020
- 4	1/4	.383	.380
- 5	5/16	.450	.430
- 6	3/8	.497	.480
- 8	1/2	.685	.520
-10	5/8	.794	.615
-12	3/4	.966	.645
-16	1	1.216	.745
-20	1-1/4	1.528	.800
-24	1-1/2	1.778	.800
-28	1-3/4	2.153	.940
-32	2	2.399	.940
-40	2-1/2	2.910	1.000
-48	3	3.410	1.000

NOTES:

1. SLEEVES SHALL BE FREE FROM ALL HANGING BURRS AND SLIVERS WHICH MIGHT BECOME DISLODGED UNDER USAGE.
2. MAXIMUM SURFACE ROUGHNESS (REF. MIL-STD-10) 125 RHR.

MATERIAL:

ADD DD AFTER DASH NUMBER FOR ALUMINUM ALLOY 2024-T4.
ADD T AFTER DASH NUMBER FOR TITANIUM ALLOY 6Al-4V STABILIZED ANNEALED PER AMS4928.
ADD C AFTER DASH NUMBER FOR CORROSION-RESISTANT STEEL TYPE 321 PER QQ-S-763, Class 8.

HEAT-TREAT:

ALUMINUM ALLOY: AGE TO T6 CONDITION BY HOLDING AT 375°F ± 5°F FOR 12-13 HOURS.
TITANIUM ALLOY: NONE
CORROSION-RESISTANT STEEL: NONE

SURFACE TREATMENT:

ALUMINUM ALLOY: GOLD ANODIZE PER MIL-A-8625 TYPE 11
TITANIUM ALLOY: NONE
CORROSION RESISTANT STEEL: PASSIVATE PER MIL-S-5002

EXAMPLE OF CODE:

VSF1057-8DD SLEEVE - ALUMINUM ALLOY, FOR USE WITH 1/2 O.D. TUBING
VSF1057-12T SLEEVE - TITANIUM ALLOY, FOR USE WITH 3/4 O.D. TUBING
VSF1057-16C SLEEVE - CORROSION RESISTANT STEEL, FOR USE WITH 1-O.D. TUBING

THIS SLEEVE IS INTENDED FOR USE ONLY WITH THE
VSF 1058 INSERT

DIMENSIONS IN INCHES

PATENT PENDING

APPROVED DATE	TITLE	STANDARD
4 August 1960	SLEEVE-FLARED, SPECIAL UNION ASSEMBLY SCOTT CONNECTOR SYSTEM	VSF1057
LATEST REVISION DATE		SHEET 1 OF 1

VOI-SHAN MANUFACTURING COMPANY
A DIVISION OF VOI-SHAN INDUSTRIES, INC.

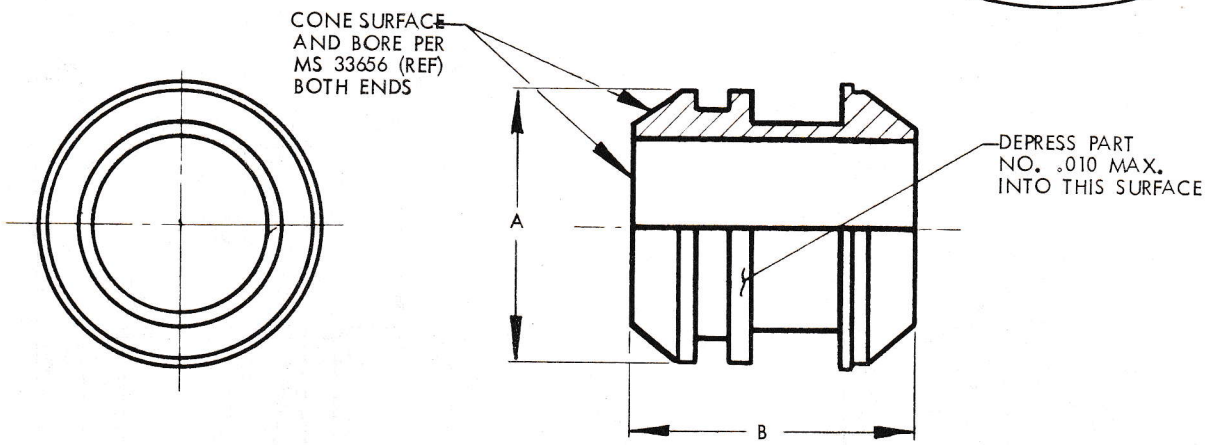

DASH NO.	TUBE SIZE O.D.	A ±.020	B ± .020		
			LONG	MEDIUM	SHORT
-4	1/4	.414	.921	.864	.802
-5	5/16	.477	.947	.890	.834
-6	3/8	.593	1.055	.998	.940
-8	1/2	.695	1.046	.988	.931
-10	5/8	.805	1.196	1.138	1.080
-12	3/4	.977	1.234	1.176	1.118
-16	1	1.226	1.302	1.244	1.186
-20	1-1/4	1.539	1.334	1.277	1.219
-24	1-1/2	1.789	1.364	1.307	1.249
-28	1-3/4	2.163	1.284	1.227	1.169
-32	2	2.413	1.308	1.251	1.193
-40	2-1/2	2.912	1.310	1.253	1.195
-48	3	3.412	1.310	1.253	1.195

NOTES:

1. INSERTS SHALL BE FREE FROM ALL HANGING BURRS AND SLIVERS WHICH MIGHT BECOME DISLODGED UNDER USAGE.
2. MAXIMUM SURFACE ROUGHNESS (REF. MIL-STD-10) 125 RHR.

MATERIAL:

ADD DD AFTER DASH NUMBER FOR ALUMINUM ALLOY 2024-T4
ADD T AFTER DASH NUMBER FOR TITANIUM ALLOY 6Al-4V STABILIZED ANNEALED PER AMS 4928
ADD C AFTER DASH NUMBER FOR CORROSION RESISTANT STEEL TYPE 321 PER QQ-S-763, CLASS 8

HEAT-TREAT:

ALUMINUM ALLOY: AGE TO T6 CONDITION BY HOLDING AT 375°F ± 5° FOR 12-13 HOURS.
TITANIUM ALLOY: NONE
CORROSION RESISTANT STEEL: NONE

SURFACE TREATMENT:

ALUMINUM ALLOY: SURFACE CONVERSION PER MIL-C-5541, CLASS I, TYPE II SPECIFICATION
TITANIUM ALLOY: NONE
CORROSION RESISTANT STEEL: PASSIVATE PER MIL-S-5002

TUBE WALL THICKNESS:

ADD A AFTER BASIC NO. FOR LONG TYPE INSERT USED WITH TUBE WALL THICKNESS .010 TO .035.
ADD B AFTER BASIC NO. FOR MEDIUM TYPE INSERT USED WITH TUBE WALL THICKNESS .035 TO .057.
ADD C AFTER BASIC NO. FOR SHORT TYPE INSERT USED WITH TUBE WALL THICKNESS .058 TO .083.

EXAMPLE OF CODE:

VSF 1058 B 16T INSERT, MEDIUM TYPE-TITANIUM ALLOY, FOR USE WITH 1-INCH O.D. TUBING (.035 TO .057 WALL)
VSF 1058 A 8DD INSERT, LONG TYPE-ALUMINUM ALLOY, FOR USE WITH 1/2-INCH O.D. TUBING (.010 TO .034 WALL)

DIMENSIONS IN INCHES

THIS INSERT IS INTENDED FOR USE ONLY WITH THE VSF 1057 SLEEVE

PATENT PENDING

APPROVED DATE	TITLE	STANDARD
August 4, 1960	INSERT - FLARED, SPECIAL UNION ASSEMBLY SCOTT CONNECTOR SYSTEM	VSF1058
LATEST REVISION DATE		SHEET 1 OF 1

VOI-SHAN MANUFACTURING COMPANY
A DIVISION OF VOI-SHAN INDUSTRIES, INC.

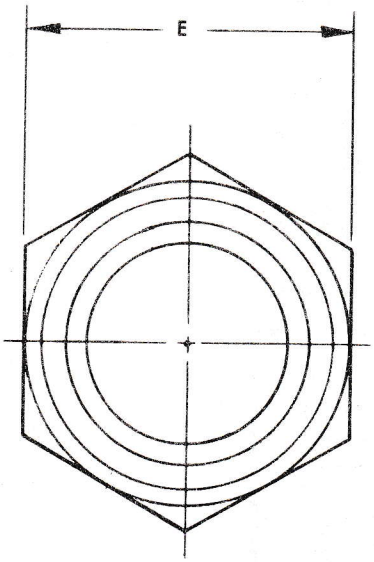

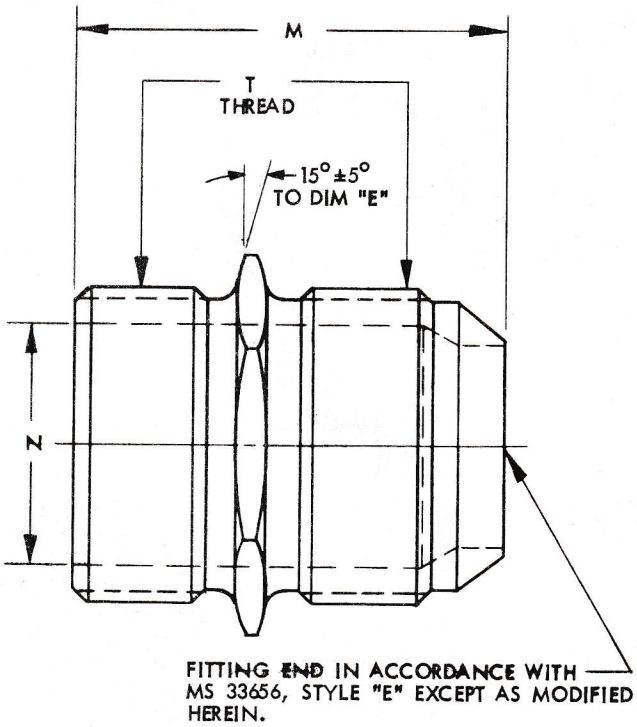

NOTES:

1. FITTINGS SHALL BE FREE FROM ALL HANGING BURRS AND SLIVERS WHICH MIGHT BECOME DISLODGED UNDER USAGE.
2. ALL THREADS PER MIL-S-7742
3. MAXIMUM SURFACE ROUGHNESS (REF. MIL-STD-10) 125 RHR EXCEPT AS NOTED.

MATERIAL: ADD DD AFTER DASH NUMBER FOR ALUMINUM ALLOY 2024-T4.
ADD T AFTER DASH NUMBER FOR TITANIUM ALLOY 6 Al-4 V STABILIZED ANNEALED PER AMS 4928
ADD C AFTER DASH NUMBER FOR CORROSION RESISTANT STEEL CLASS 321 PER QQ-S-763

HEAT-TREAT:	ALUMINUM ALLOY:	AGE TO T6 BY HOLDING AT 375°F ± 5°F FOR 12-13-HOURS.
	TITANIUM:	NONE
	CORROSION RESISTANT STEEL:	NONE
SURFACE TREATMENT:	ALUMINUM:	GOLD ANODIZE PER MIL-A-8625 TYPE II
	TITANIUM:	SURFACE CONVERSION PER VOI-SHAN SPECIFICATION VS-3S-FP-TI
	CORROSION RESISTANT STEEL:	PASSIVATE PER MIL-S-5002

EXAMPLE OF CODE:
VSF 1059-8DD = UNION, FLARED TUBE, ALUMINUM ALLOY, FOR USE WITH 1/2 O.D. TUBING.
VSF 1059-12T = UNION, FLARED TUBE, TITANIUM ALLOY, FOR USE WITH 3/4 O.D. TUBING.
VSF 1059-16C = UNION, FLARED TUBE, CORROSION RESISTANT STEEL, FOR USE WITH 1-INCH O.D. TUBING

APPROVED DATE	TITLE	STANDARD
30 September 1960	SPECIAL BOSS UNION	
LATEST REVISION DATE	FLARED - LIGHTWEIGHT	VSF1059
		SHEET 1 OF 2

VOI-SHAN MANUFACTURING COMPANY
A DIVISION OF VOI-SHAN INDUSTRIES, INC.

DASH NO.	TUBING O.D.	"T" THREAD REF	E	TOL.	M	N +.001 -.003
-4	1/4	7/16-20 UNF-3A	.688	-.004 +.003	1.057	.221
-5	5/16	1/2-20 UNF-3A	.750		1.057	.281
-6	3/8	9/16-18 UNF-3A	.813		1.101	.339
-8	1/2	3/4-16 UNF-3A	1.000		1.279	.515
-10	5/8	7/8-14 UNF-3A	1.125		1.468	.625
-12	3/4	1-1/16-12 UN-3A	1.375		1.663	.796
-16	1	1-5/16-12 UN-3A	1.625	±.016	1.757	1.055
-20	1-1/4	1-5/8-12 N-3A	1.875		1.814	1.367
-24	1-1/2	1-7/8-12 N-3A	2.125	±.020	2.053	1.616
-28	1-3/4	2-1/4-12 UN-3A	2.500		2.246	1.991
-32	2	2-1/2-12 UN-3A	2.750		2.486	2.241
-40	2-1/2	3-12 UN-3A	3.250		2.119	2.741
-48	3	3-1/2-12 UN-3A	3.750		2.291	3.241

DIMENSIONS IN INCHES: TOLERANCES UNLESS OTHERWISE SPECIFIED:

DECIMALS ±.010, FRACTIONS ± 1/64, ANGLES ± 1/2°

APPROVED DATE	TITLE	STANDARD
30 September 1960	SPECIAL BOSS UNION	VSF1059
LATEST REVISION DATE	FLARED - LIGHTWEIGHT	SHEET 2 OF 2

VOI-SHAN MANUFACTURING COMPANY
A DIVISION OF VOI-SHAN INDUSTRIES, INC.

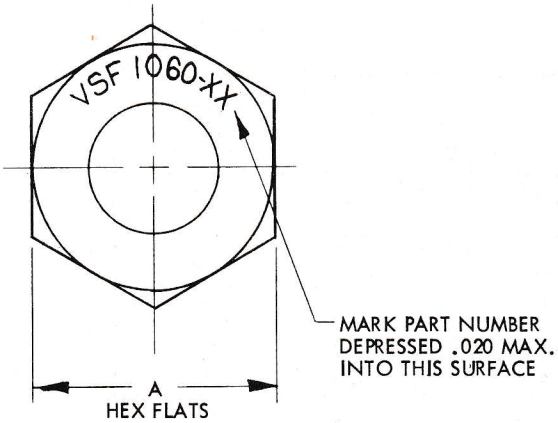

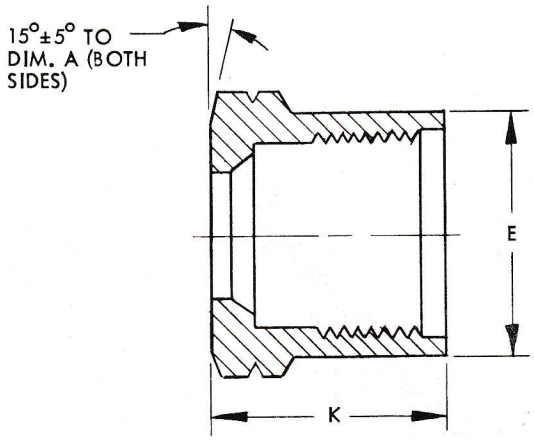

DASH NO.	TUBE SIZE O.D.	THREAD (c)	+.003 A -.004* ±.020**	E ±.005	K
4	1/4	7/16-20 UNF-3B	.562*	.519	.736
5	5/16	1/2-20 UNF-3B	.625*	.582	.736
6	3/8	9/16-18 UNF-3B	.688*	.644	.776
8	1/2	3/4-16 UNF-3B	.875*	.834	.867
10	5/8	7/8-14 UNF-3B	1.000*	.961	.939
12	3/4	1-1/16-12 UN-3B	1.250*	1.170	1.096
16	1	1-5/16-12 UN-3B	1.500**	1.420	1.132
20	1-1/4	1-5/8-12 N-3B	1.750**	1.733	1.159
24	1-1/2	1-7/8-12 N-3B	2.000**	1.983	1.180
28	1-3/4	2-1/4-12 UN-3B	2.500**	2.368	1.267
32	2	2-1/2-12 UN-3B	2.750**	2.618	1.267
40	2-1/2	3-12 UN-3B	3.250**	3.118	1.279
48	3	3-1/2-12 UN-3B	3.750**	3.618	1.289

NOTES:
(a) MAXIMUM SURFACE ROUGHNESS (REF. MIL-STD. -10) 125 RHR.
(b) NUTS SHALL BE FREE FROM ALL HANGING BURRS AND SLIVERS WHICH MIGHT BECOME DISLODGED UNDER USAGE.
(c) ALL THREADS PER MIL-S-7742 SPECIFICATION.

MATERIAL:
ADD DD AFTER DASH NO. FOR ALUMINUM ALLOY 2024-T4.
ADD C AFTER DASH NO. FOR CORROSION RESISTANT STEEL CLASS 321 PER QQ-S-763.
ADD T AFTER DASH NO. FOR TITANIUM ALLOY 6Al-4V STABILIZED ANNEALED PER AMS 4928.

HEAT TREAT:
ALUMINUM ALLOY: AGE TO T6 CONDITION BY HOLDING AT 375° F ± 5° F FOR 12-13 HOURS.
CORROSION RESISTANT STEEL: NONE.
TITANIUM ALLOY: NONE.

SURFACE TREATMENT:
ALUMINUM ALLOY: GOLD ANODIZE PER MIL-A-8625 TYPE II.
CORROSION RESISTANT STEEL: PASSIVATE PER MIL-S-5002.
TITANIUM ALLOY: SURFACE CONVERSION PER VOI-SHAN SPECIFICATION VS-3S-FP-T1.

EXAMPLE OF CODE:
VSF 1060 - 8DD = NUT - ALUMINUM ALLOY, FOR USE WITH 1/2 O.D. TUBING.
VSF 1060 - 12T = NUT - TITANIUM ALLOY, FOR USE WITH 3/4 O.D. TUBING.

DIMENSIONS IN INCHES:
TOLERANCE UNLESS OTHERWISE SPECIFIED: FRACTIONS ± 1/64 ANGLES ± 1/2°.

APPROVED DATE	TITLE	STANDARD
17 OCTOBER 1960	NUT LIGHTWEIGHT SHORT THREAD	VSF1060
LATEST REVISION DATE 17 NOVEMBER 1960		SHEET 1 OF 1

VOI-SHAN MANUFACTURING COMPANY
A DIVISION OF VOI-SHAN INDUSTRIES, INC.

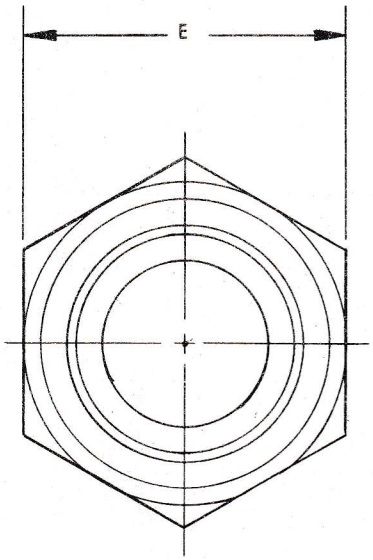

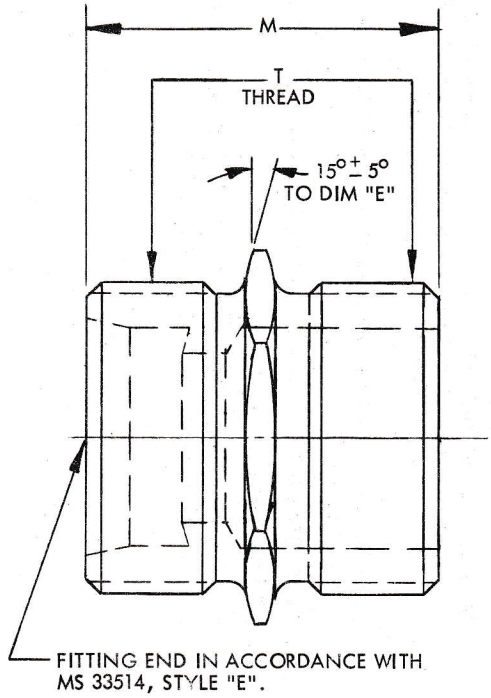

DASH NO.	TUBE O.D.	'T' THREAD	E		M ± .010
-4	1/4	7/16-20 UNF-3A	.688		.800
-5	5/16	1/2-20 UNF-3A	.750	+.003	.800
-6	3/8	9/16-18 UNF-3A	.813	-.004	.913
-8	1/2	3/4-16 UNF-3A	1.000		1.030
-10	5/8	7/8-14 UNF-3A	1.125		1.146
-12	3/4	1-1/16-12 UN-3A	1.375		1.326
-16	1	1-5/16-12 UN-3A	1.625	±.016	1.326
-20	1-1/4	1-5/8-12 N-3A	1.875		1.341
-24	1-1/2	1-7/8-12 N-3A	2.125	±.020	1.341
-32	2	2-1/2-12 UN-3A	2.750		1.357

NOTES:

1. FITTINGS SHALL BE FREE FROM ALL HANGING BURRS AND SLIVERS WHICH MIGHT BECOME DISLODGED UNDER USAGE.
2. ALL THREADS PER MIL-S-7742.
3. MAXIMUM SURFACE ROUGHNESS (REF. MIL-STD-10) 125 RHR EXCEPT AS NOTED.

MATERIAL:
ADD DD AFTER DASH NUMBER FOR ALUMINUM ALLOY 2024-T4.
ADD T AFTER DASH NUMBER FOR TITANIUM ALLOY 6AL-4V STABILIZED ANNEALED PER AMS 4928.
ADD C AFTER DASH NUMBER FOR CORROSION RESISTANT STEEL CLASS 321 PER QQ-S-763.

HEAT TREAT:
ALUMINUM ALLOY: AGE TO T6 BY HOLDING AT 375° F ± 5° F FOR 12-13 HOURS.
TITANIUM: NONE
CORROSION RESISTANT STEEL: NONE

SURFACE TREATMENT:
ALUMINUM: GOLD ANODIZE PER MIL-A-8625 TYPE 11.
TITANIUM: SURFACE CONVERSION PER VOI-SHAN SPECIFICATION VS-3S-FP-T1.
CORROSION RESISTANT STEEL: PASSIVATE PER MIL-S-5002.

EXAMPLE OF CODE:
VSF 1061-8DD=UNION, FLARELESS TUBE, ALUMINUM ALLOY, FOR USE WITH 1/2 O.D. TUBING.
VSF 1061-12T =UNION, FLARELESS TUBE, TITANIUM ALLOY FOR USE WITH 3/4 O.D. TUBING.
VSF 1061-16C =UNION, FLARELESS TUBE, CORROSION RESISTANT STEEL, FOR USE WITH 1-INCH O.D. TUBING.

APPROVED DATE	TITLE	STANDARD
20 OCTOBER 1960	SPECIAL BOSS UNION	
LATEST REVISION DATE 10 NOVEMBER 1960	FLARELESS - LIGHTWEIGHT	VSF1061
		SHEET 1 OF 1

VSF 1067

NOTES:

MATERIAL: ALUMINUM ALLOY 5086-O DRAWN PER MIL-T-21494, OR 5456-O DRAWN PER MIL-T-21597.

1. SURFACE ROUGHNESS, WAVINESS & LAY PER RMD SPEC. 7401
2. A SURFACES SHALL BE CONCENTRIC.
3. 125 ALL FINISH SURFACES.
4. PARALLEL, FLAT, SQUARE & TRUE (AS APPLICABLE) TO EACH OTHER WITHIN .003 F.I.R.

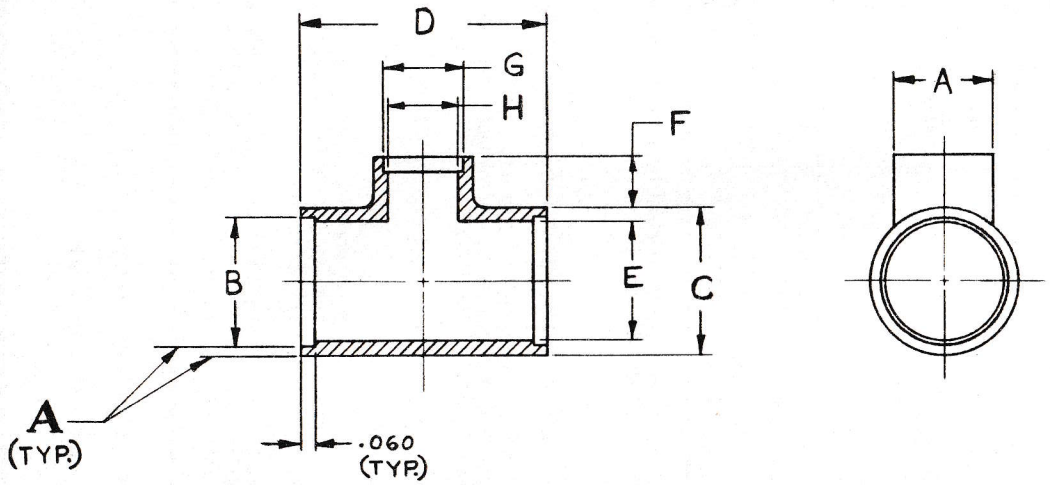

TYPICAL EXAMPLE: (DASH NUMBERS ARE IN SIXTEENTHS.)

VSF1067-A5B8C8

- "C" DIM. IS 1/2" SIZE.
- "B" DIM. IS 1/2" SIZE
- "A" DIM. IS 5/16 SIZE
- BASIC PART NO.

DASH NO.	A (DIA.) ±.005	B (DIA.) ±.002	C (DIA.) ±.005	D (MAX.)	E (DIA.) ±.005	F (DIA.) ±.005	G (DIA.) ±.002	H (DIA.) ±.005
VSF1067-A4B4C4	.330	.255	.330	.80	.210	.230	.255	.210
-A5B5C5	.392	.317	.392	.90	.272	.250	.317	.272
-A5B8C8	.392	.505	.580	1.00	.460	.250	.317	.272

REVISIONS	LETTER	DATE

TOLERANCES UNLESS OTHERWISE SPECIFIED: FRACTIONAL DIMENSIONS ± 1/64; DECIMAL DIMENSIONS ± .005; BREAK ALL SHARP CORNERS

MATERIAL	HEAT TREATMENT	FINISH	PLATING
NOTED	NONE	NONE	NONE

THE TECHNICAL INFORMATION CONTAINED HEREIN WAS CREATED OR ORGANIZED BY THE VOI-SHAN MANUFACTURING COMPANY AND ACCORDINGLY IS VOI-SHAN PROPERTY. WHEN THIS COPY IS ON LOAN, NO PART MAY BE REPRODUCED OR DISCLOSED WITHOUT THE EXPRESS CONSENT OF VOI-SHAN. THIS COPY MUST BE RETURNED TO VOI-SHAN UPON REQUEST.

VOI-SHAN MANUFACTURING COMPANY
A DIVISION OF VOI-SHAN INDUSTRIES, INC.

DRAWN BY	CHECKED BY	APPROVED BY	SCALE	DATE
A.A.	T.R.	JIM SCOTT	NONE	3-15-62

DESCRIPTION: WELDING TEE

NUMBER: VSF 1067

VOI-SHAN MANUFACTURING COMPANY
A DIVISION OF VOI-SHAN INDUSTRIES, INC.

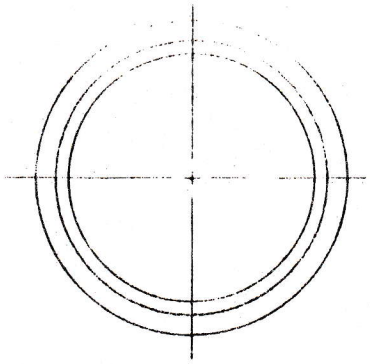

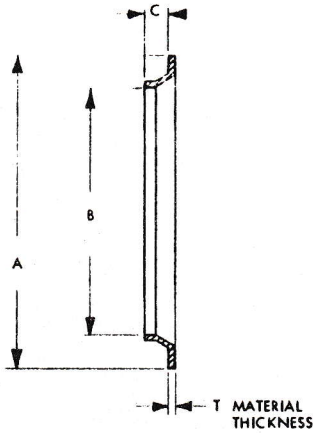

DASH NO.	TUBE SIZE O.D.	A ± .005	B + .000 - .005	C + .000 - .010	T MAT'L THICKNESS
2	1/8	.563	.318	.048	.005
3	3/16	.625	.380	.048	
4	1/4	.688	.444	.060	
5	5/16	.750	.507	.060	
6	3/8	.813	.570	.068	
8	1/2	1.000	.759	.079	
10	5/8	1.125	.886	.092	
12	3/4	1.375	1.066	.095	.010
16	1	1.625	1.316	.095	
20	1-1/4	1.875	1.628	.095	
24	1-1/2	2.125	1.878	.095	
28	1-3/4	2.500	2.253	.095	
32	2	2.750	2.504	.095	

Distribution in whole or in part of this document should be limited to those persons who must necessarily review it for the purposes above set forth. No right to reproduce this document or any part thereof is granted unless by written agreement with or written permission of Voi-Shan Industries, Inc. Nothing contained herein is intended to restrict the use by customers of Voi-Shan Industries, Inc. of any parts or products purchased from Voi-Shan Industries, Inc.

This document contains technical information proprietary to Voi-Shan Industries, Inc. and is only conditionally issued. Neither receipt nor possession thereof confers or transfers any right in, or license to use the subject matter of the document or any design or technical information shown thereon, nor any right to reproduce this document nor any part thereof except for manufacturing by vendors for Voi-Shan Industries, Inc. and for manufacturing under any written license granted by Voi-Shan Industries, Inc.

RECOMMENDED NUT:		CODE IDENT. NO. 92215
APPROVED DATE 9 APRIL 1962	TITLE SCOT BOSS - SEAL	STANDARD
LATEST REVISION DATE		VSF 1068 SHEET 1 OF 2

NOTES:

1. REMOVE ALL SHARP EDGES AND BURRS.
2. THESE PARTS ARE ANNEALED. DIMENSIONS "A" AND "C" SHALL BE VERIFIED BY INSTALLING THE GASKET IN A STANDARD FITTING BOSS PER AND10050 OF APPROPRIATE SIZE. AN OUT OF ROUND CONDITION WHICH DOES NOT PREVENT SUCH INSTALLATION SHALL NOT BE CAUSE FOR REJECTION UNLESS THE GASKET MATERIAL IS CREASED OR NICKED.

MATERIAL:

"A" BEFORE DASH NUMBER INDICATES ALUMINUM ALLOY 1100 (2S) SHEET, CONDITION "O" PER QQ-A-561 SPECIFICATION.

"C" BEFORE DASH NUMBER INDICATES OXYGEN FREE COPPER STRIP, SOFT-ANNEALED PER QQ-C-576 SPECIFICATION.

"CT" BEFORE DASH NUMBER INDICATES OXYGEN FREE COPPER STRIP, SOFT-ANNEALED PER QQ-C-576 SPECIFICATION, TIN-PLATED PER AMS 2408-2.

"N" BEFORE DASH NUMBER INDICATES LOW-CARBON NICKEL STRIP, ANNEALED PER ASTM-B162-58T SPECIFICATION.

"NT" BEFORE DASH NUMBER INDICATES LOW-CARBON NICKEL STRIP, ANNEALED PER ASTM-B162-58T SPECIFICATION, TIN-PLATED PER AMS 2408-2.

"NS" BEFORE DASH NUMBER INDICATES LOW-CARBON NICKEL STRIP, ANNEALED PER ASTM-B162-58T SPECIFICATION. SILVER PLATED PER AMS 2410.

"T" BEFORE DASH NUMBER INDICATES TIN PER MIL-T-12076.

FINISH & PACKAGING:

1. PARTS TO BE CLEANED AND PACKAGED IN ACCORDANCE WITH VOI-SHAN SPECIFICATION VS-VSF-5-1. NO CODING WILL APPEAR IN THE PART NUMBER.
2. PARTS MARKETED IN BULK, WILL BE CODED WITH LETTER "B" AFTER DASH NUMBER.

EXAMPLE OF CODE:

VSF 1068 N 12
- 12 — DASH NUMBER (3/4 O.D. TUBE)
- N — MATERIAL (NICKEL)
- VSF 1068 — BASIC PART NUMBER

VSF 1068 CT B
- B — DASH NUMBER (1/2 O.D. TUBE)
- CT — MATERIAL (TIN PLATED COPPER)
- VSF 1068 — BASIC PART NUMBER

VSF 1068 T 4 B
- B — CODE FOR NON-LOX CLEAN BULK PACKAGING
- 4 — DASH NUMBER (1/4 O.D. TUBE)
- T — MATERIAL (TIN)
- VSF 1068 — BASIC PART NUMBER

RECOMMENDED NUT:	PATENT APPLIED FOR	CODE IDENT. NO. 92215
APPROVED DATE 9 APRIL 1962	TITLE SCOT BOSS - SEAL	STANDARD
LATEST REVISION DATE		VSF 1068
		SHEET 2 OF 2

nor any part thereof except for manufacturing by vendors for Voi-Shan Industries, Inc. and for manufacturing under any written license granted by Voi-Shan Industries, Inc.
the use by customers of Voi-Shan Industries, Inc. of any parts or products purchased from Voi-Shan Industries, Inc.

VOI-SHAN MANUFACTURING COMPANY
A DIVISION OF VOI-SHAN INDUSTRIES, INC.

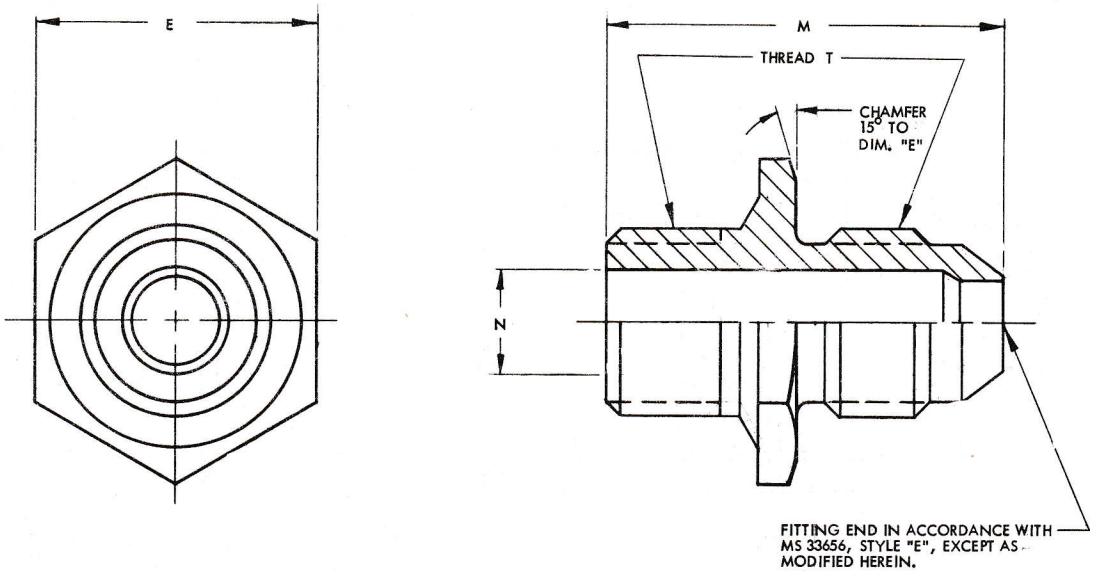

DASH NO.	TUBING O.D.	THREAD "T" REF.	E		M	N	
			MAX.	MIN.		MAX.	MIN.
- 2	1/8	5/16-24UNF-3A	.566	.559	1.000	.109	.105
- 3	3/16	3/8-24UNF-3A	.628	.621	1.069	.164	.160
- 4	1/4	7/16-20UNF-3A	.691	.684	1.183	.222	.218
- 5	5/16	1/2-20UNF-3A	.753	.746	1.183	.282	.278
- 6	3/8	9/16-18UNF-3A	.817	.809	1.241	.340	.336
- 8	1/2	3/4-16UNF-3A	1.003	.996	1.370	.516	.512
-10	5/8	7/8-14UNF-3A	1.128	1.121	1.593	.626	.622
-12	3/4	1 1/16-12UN-3A	1.378	1.371	1.856	.797	.793
-16	1	1 5/16-12UN-3A	1.641	1.609	1.887	1.056	1.052
-20	1 1/4	1 5/8-12UN-3A	1.891	1.859	1.934	1.368	1.364
-24	1 1/2	1 7/8-12UN-3A	2.145	2.105	2.059	1.617	1.613
-28	1 3/4	2 1/4-12UN-3A	2.520	2.480	2.217	1.992	1.988
-32	2	2 1/2-12UN-3A	2.770	2.730	2.340	2.242	2.238

NOTES:
1. FITTINGS SHALL BE FREE FROM ALL HANGING BURRS AND SLIVERS WHICH MIGHT BECOME DISLODGED UNDER USAGE.
2. ALL THREADS PER MIL-S-7742.
3. MAXIMUM SURFACE ROUGHNESS (REF. MIL-STD-10) 125 RHR EXCEPT AS NOTED.

MATERIAL:
ADD DD AFTER DASH NUMBER FOR ALUMINUM ALLOY 2024 - T4.
ADD T AFTER DASH NUMBER FOR TITANIUM ALLOY 6Al - 4V STABILIZED ANNEALED PER AMS 4928.
ADD C AFTER DASH NUMBER FOR CORROSION RESISTANT STEEL CLASS 321 PER QQ-5-763.

HEAT TREAT:
ALUMINUM ALLOY: AGE TO T6 BY HOLDING AT 375°F ± 5°F FOR 12 - 13 HOURS.
TITANIUM: NONE
CORROSION RESISTANT STEEL: NONE

SURFACE TREATMENT:
ALUMINIM: GOLD ANODIZE PER MIL-A-8625 TYPE II
TITANIUM: SURFACE CONVERSION PER VOI-SHAN SPECIFICATION VS-3S-FP-TI.
CORROSION RESISTANT STEEL: PASSIVATE PER MIL-S-5002

EXAMPLE OF CODE:
VSF 1069 - 8DD = SCOT BOSS UNION, ALUMINUM ALLOY, FOR USE WITH 1/2 O.D. TUBING.
VSF 1069 - 12T = SCOT BOSS UNION, TITANIUM ALLOY, FOR USE WITH 3/4 O.D. TUBING.
VSF 1069 - 16C = SCOT BOSS UNION, CORROSION RESISTANT STEEL, FOR USE WITH 1 INCH O.D. TUBING.

DIMENSIONS IN INCHES.

TOLERANCES: UNLESS OTHERWISE SPECIFIED: DECIMALS ± .010
ANGLES ± 5°

ENGINEERING INFORMATION: VSF 1069 UNIONS ARE DIRECTLY INTERCHANGEABLE WITH AN 815 UNIONS WHEN USED WITH AND 10050 TYPE BOSSES.

PATENT APPLIED FOR.

CODE IDENT. NO. 92215

APPROVED DATE	TITLE	STANDARD
29 JUNE 1962	SCOT BOSS UNION	VSF 1069
LATEST REVISION DATE		SHEET 1 OF 1

Distribution in whole or in part of this document should be limited to those persons who must necessarily review it for the purposes above set forth. No right to reproduce this document or any part thereof is granted unless by written agreement with or written permission of Voi-Shan Industries, Inc. Nothing contained herein is intended to restrict the use by customers of Voi-Shan Industries, Inc. of any parts or products purchased from Voi-Shan Industries, Inc.

This document contains technical information proprietary to Voi-Shan Industries, Inc. and is only conditionally issued. Neither receipt nor possession thereof confers or transfers any right in, or license to use the subject matter of the document or any design or technical information shown thereon, nor any right to reproduce this document nor any part thereof except for manufacturing by vendors for Voi-Shan Industries, Inc. and for manufacturing under any written license granted by Voi-Shan Industries, Inc.

VOI-SHAN MANUFACTURING COMPANY
A DIVISION OF VOI-SHAN INDUSTRIES, INC.

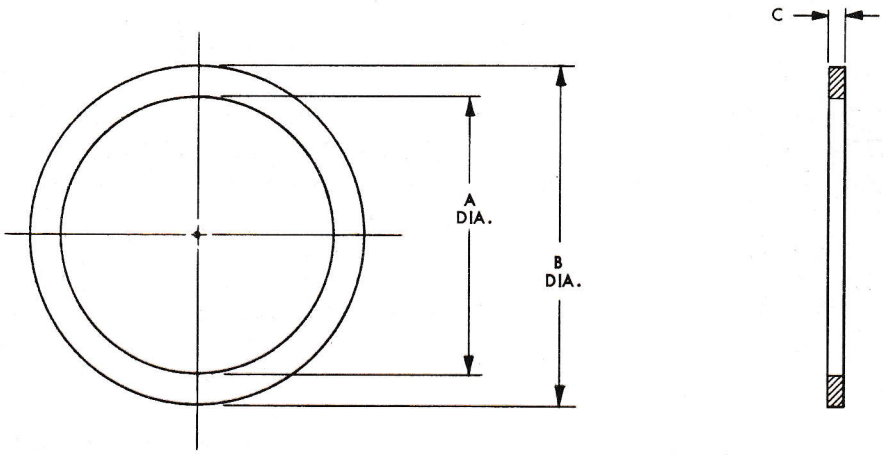

DASH NO.	A DIA. ±.010	B DIA. ±.010	C +.000 -.005
- 1	1.000	1.480	.050
- 2	1.250	1.730	.050
- 3	1.500	1.980	.050
- 4	1.750	2.230	.050
- 5	2.000	2.480	.050
- 6	2.250	2.730	.050
- 7	2.500	2.980	.050
- 8	2.750	3.230	.050
- 9	3.000	3.480	.050
-10	3.250	3.730	.050
-11	3.500	3.980	.050
-12	3.750	4.230	.050
-13	4.000	4.480	.050
-14	4.250	4.730	.050
-15	4.500	4.980	.050
-16	4.750	5.230	.050

DASH NO.	A DIA. ±.010	B DIA. ±.010	C +.000 -.005
-17	5.000	5.480	.050
-18	5.250	5.730	.050
-19	5.500	5.980	.050
-20	5.750	6.230	.050
-21	6.000	6.480	.050
-22	6.250	6.730	.050
-23	6.500	6.980	.050
-24	6.750	7.230	.050
-25	7.000	7.480	.050
-26	7.250	7.730	.050
-27	7.500	7.980	.050
-28	7.750	8.230	.050
-29	8.000	8.480	.050
-30	8.250	8.730	.050
-31	8.500	8.980	.050
-32	8.750	9.230	.050

DASH NO.	A DIA. ±.010	B DIA. ±.010	C +.000 -.005
-33	9.000	9.480	.050
-34	9.250	9.730	.050
-35	9.500	9.980	.050
-36	9.750	10.230	.050
-37	10.000	10.480	.050
-38	10.250	10.730	.050
-39	10.500	10.980	.050
-40	10.750	11.230	.050
-41	11.000	11.480	.050
-42	11.250	11.730	.050
-43	11.500	11.980	.050
-44	11.750	12.230	.050
-45	12.000	12.480	.050
-46	12.250	12.730	.050
-47	12.500	12.980	.050
-48	12.750	13.230	.050

DASH NO.	A DIA. ±.010	B DIA. ±.010	C +.000 -.005
-49	13.000	13.480	.050
-50	13.250	13.730	.050
-51	13.500	13.980	.050
-52	13.750	14.230	.050
-53	14.000	14.480	.050
-54	14.250	14.730	.050
-55	14.500	14.980	.050
-56	14.750	15.230	.050
-57	15.000	15.480	.050
-58	15.250	15.730	.050
-59	15.500	15.980	.050
-60	15.750	16.230	.050
-61	16.000	16.480	.050

NOTES:

1. DIAMETERS "A" AND "B" TO BE CONCENTRIC TO EACH OTHER WITHIN .040 T.I.R.
2. RADIUS ON CORNERS TO BE .005 MAX.
3. ALL PARTS TO BE ULTRA SONIC DEBURRED.

FINISH AND PACKAGING: PARTS TO BE CLEANED AND PACKAGED IN ACCORDANCE WITH VOI-SHAN SPECIFICATION VS-VSF-5-1.

MATERIAL:

"A" BEFORE DASH NO. INDICATES ALUMINUM ALLOY 1100(2S) SHEET, CONDITION O PER QQ-A-561 SPECIFICATION.

"N" BEFORE DASH NO. INDICATES LOW-CARBON NICKEL STRIP, COLD-ROLLED, ANNEALED PER ASTM-B162-58T SPEC.

"C" BEFORE DASH NO. INDICATES OXYGEN-FREE COPPER STRIP, HOT-ROLLED, SOFT-ANNEALED PER QQ-C 576 SPEC.

"CT" BEFORE DASH NO. INDICATES OXYGEN-FREE COPPER STRIP, HOT-ROLLED, SOFT-ANNEALED PER QQ-C 576 SPECIFICATION, TIN-PLATED PER AMS 2408-2.

EXAMPLE OF CODE:

VSF 1070 N 9

DASH NUMBER (3.000 INCH)
MATERIAL (NICKEL)
BASIC NUMBER

VSF 1070 CT 2 7

DASH NUMBER (7.500 INCH)
MATERIAL (TIN-PLATED COPPER)
BASIC NUMBER

PATENT APPLIED FOR

CODE IDENT. NO.
92215

APPROVED DATE	TITLE	STANDARD
11 AUGUST 1961	GASKET - FLANGE SEALING	VSF 1070
LATEST REVISION DATE		SHEET OF

VOI-SHAN MANUFACTURING COMPANY
A DIVISION OF VOI-SHAN INDUSTRIES, INC.

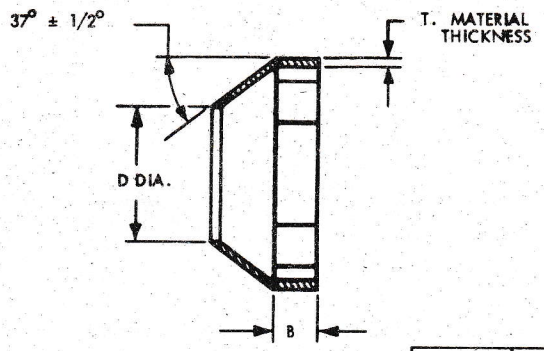

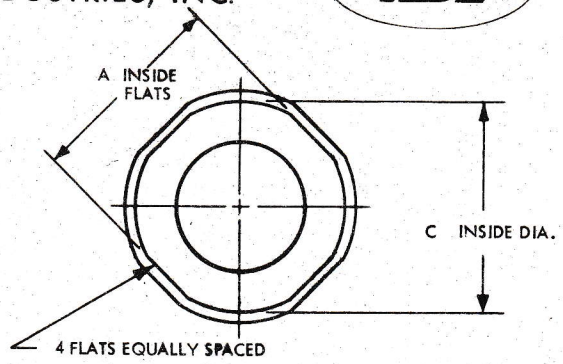

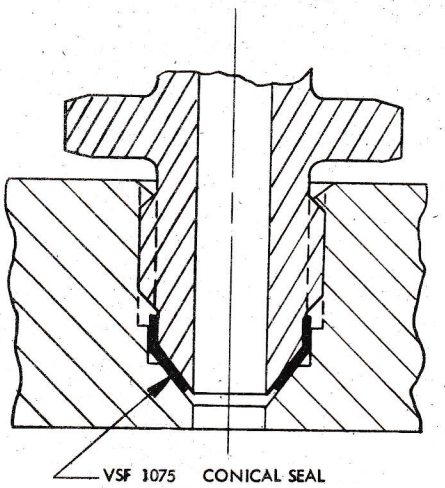

DASH	TUBE SIZE O.D.	A +.005 -.000	B +.000 - .005	C +.005 -.000	D + .008 - .000	T MAT'L. SIZE
2	1/8	.240	.060	.245	.103	.005
3	3/16	.302		.307	.166	
4	1/4	.354	.075	.359	.213	
5	5/16	.416		.421	.275	
6	3/8	.471		.476	.338	
8	1/2	.649	.095	.654	.446	.010
9	9/16	.717		.722	.529	
10	5/8	.762	.105	.767	.562	
12	3/4	.933		.938	.687	
14	7/8	1.065		1.070	.826	
16	1	1.183	.125	1.188	.936	
20	1-1/4	1.496		1.501	1.175	
24	1-1/2	1.745		1.750	1.410	
28	1-3/4	2.120		2.125	1.680	
32	2	2.370		2.375	1.913	
40	2-1/2	2.877	.055	2.882	2.500	.015
44	2-3/4	3.127		3.132	2.742	
48	3	3.377		3.382	2.990	

NOTES:
1. TO BE USED WITH VSD 1000 BOSS DESIGN. SEE VSD 1000 PAGE 2 OF 2 FOR INSTALLATION REQUIREMENTS.
2. REMOVE ALL BURRS AND SHARP EDGES.

MATERIAL: "A" BEFORE DASH NO. INDICATES ALUMINUM ALLOY 1100(2S) SHEET CONDITION O PER QQ-A-561 SPECIFICATION.

"C" BEFORE DASH NO. INDICATES OXYGEN-FREE COPPER STRIP, SOFT-ANNEALED PER QQ-C-576 SPECIFICATION.

"CT" BEFORE DASH NO. INDICATES OXYGEN-FREE COPPER STRIP, SOFT-ANNEALED PER QQ-C-576 SPECIFICATION, TIN-PLATED PER AMS 2408-2.

"N" BEFORE DASH NO. INDICATES LOW-CARBON NICKEL STRIP, ANNEALED PER ASTM-B162-58T SPECIFICATION.

FINISH AND PACKAGING: PARTS TO BE CLEANED AND PACKAGED IN ACCORDANCE WITH VOI-SHAN SPECIFICATION VS-VSF-5-1. CONICALIZED (SURFACE THREATED).

EXAMPLE OF CODE:

VSF 1075 N 12
- 12 — DASH NO. (3/4 O.D. TUBE)
- N — MATERIAL (NICKEL)
- VSF 1075 — BASIC NO.

VSF 1075 CT 8
- 8 — DASH NO. (1/2 O.D. TUBE)
- CT — MATERIAL (TIN PLATED COPPER)
- VSF 1075 — BASIC NO.

The Conical Seal shown or designated hereon is authorized for the exclusive use of Voi-Shan Industries, Inc. under prime license from General Dynamics.

PATENT APPLIED FOR

Notice To All Persons Receiving This Drawing

This drawing contains technical information proprietary to Voi-Shan Industries, Inc. and is only conditionally issued. Neither receipt nor possession thereof confers or transfers any right in, or license to use the subject matter of the drawing or any design or technical information shown thereon, nor any right to reproduce this drawing nor any part thereof except for manufacture by vendor for Voi-Shan Industries, Inc. and for manufacture under any written license granted by Voi-Shan Industries, Inc. Distributions in whole or in part of this drawing or any reproduction thereof should be limited to those persons who must necessarily review it for the purposes above set forth. No right to reproduce this drawing or any part thereof is granted unless by written agreement with or written permission from Voi-Shan Industries, Inc. Nothing contained herein is intended to restrict the use by customers of Voi-Shan Industries, Inc. of any parts or products purchased from Voi-Shan Industries, Inc.

CODE IDENT. NO. 92215

APPROVED DATE 3 JANUARY 1962

LATEST REVISION DATE

TITLE
SEAL - CONICAL
FOR BOSSES
STR. THD.

STANDARD

VSF 1075

SHEET 1 OF 1

VOI-SHAN MANUFACTURING COMPANY
A DIVISION OF VOI-SHAN INDUSTRIES, INC.

NOTES:

1. TO BE USED WITH VSD 1000 BOSS DESIGN. SEE VSD 1000 PAGE 2 OF 2 FOR INSTALLATION REQUIREMENTS.
2. REMOVE ALL SHARP EDGES AND BURRS.
3. THESE PARTS ARE ANNEALED. DIMENSIONS "A" AND "C" SHALL BE VERIFIED BY INSTALLING THE GAGKET ON A STANDARD FITTING PER MS 24385 OR MS 24386 OF APPROPRIATE SIZE. AN OUT-OF-ROUND CONDITION WHICH DOES NOT PREVENT SUCH INSTALLATION SHALL NOT BE CAUSE FOR REJECTION UNLESS THE GASKET MATERIAL IS CREASED OR NICKED.

MATERIAL:

"A" BEFORE DASH NUMBER INDICATES ALUMINUM ALLOY 1100 (2S) SHEET, CONDITION "O" PER QQ-A-561 SPECIFICATION.

"C" BEFORE DASH NUMBER INDICATES OXYGEN FREE COPPER STRIP, SOFT-ANNEALED PER QQ-C-576 SPECIFICATION.

"CT" BEFORE DASH NUMBER INDICATES OXYGEN FREE COPPER STRIP, SOFT-ANNEALED PER QQ-C-576 SPECIFICATION, TIN-PLATED PER AMS 2408-2.

"N" BEFORE DASH NUMBER INDICATES LOW-CARBON NICKEL STRIP, ANNEALED PER ASTM-B162-58T SPECIFICATION.

"NT" BEFORE DASH NUMBER INDICATES LOW-CARBON NICKEL STRIP, ANNEALED PER ASTM-B162-58T SPECIFICATION, TIN-PLATED PER AMS 2408-2.

"NS" BEFORE DASH NUMBER INDICATES LOW-CARBON NICKEL STRIP, ANNEALED PER ASTM-B162-58T SPECIFICATION. SILVER PLATED PER AMS 2410.

"T" BEFORE DASH NUMBER INDICATES TIN PER MIL-T-12076.

FINISH & PACKAGING:

1. PARTS TO BE CLEANED AND PACKAGED IN ACCORDANCE WITH VOI-SHAN SPECIFICATION VS-VSF-5-1. NO CODING WILL APPEAR IN THE PART NUMBER.
2. PARTS MARKETED IN BULK, WILL BE CODED WITH LETTER "B" AFTER DASH NUMBER.

EXAMPLE OF CODE:

VSF 1075 N 12
- 12 — DASH NUMBER (3/4 O.D. TUBE)
- N — MATERIAL (NICKEL)
- VSF 1075 — BASIC PART NUMBER

VSF 1075 CT 8
- 8 — DASH NUMBER (1/2 O.D. TUBE)
- CT — MATERIAL (TIN PLATED COPPER)
- VSF 1075 — BASIC PART NUMBER

VSF 1075 T 4 B
- B — CODE FOR NON-LOX CLEAN BULK PACKAGING
- 4 — DASH NUMBER (1/4 O.D. TUBE)
- T — MATERIAL (TIN)
- VSF 1075 — BASIC PART NUMBER

PATENT APPLIED FOR

APPROVED DATE 3 JANUARY 1962 LATEST REVISION DATE	TITLE SEAL - CONICAL FOR BOSSES STR. THD.	CODE IDENT. NO. 92215 STANDARD VSF 1075 SHEET 2 OF 2

VOI-SHAN MANUFACTURING COMPANY
A DIVISION OF VOI-SHAN INDUSTRIES, INC.

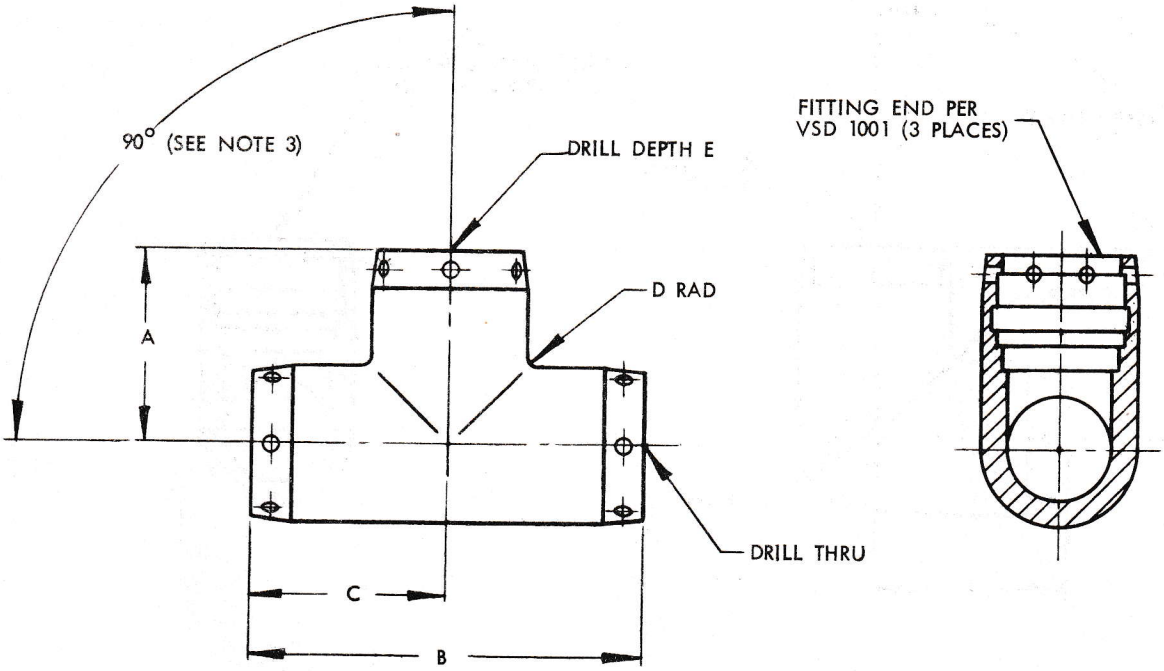

DASH NO.	TUBE O.D. REF.	A ± .020	B ± .020	C ± .010	D ± .020	E $^{+.040}_{-.00}$
4	1/4	.526	1.052	.526	.062	.573
5	5/16	.575	1.150	.575	.062	.622
6	3/8	.656	1.312	.656	.093	.719
8	1/2	.773	1.546	.773	.093	.836
10	5/8	.908	1.816	.908	.125	.971
12	3/4	1.028	2.056	1.028	.125	1.091
16	1	1.272	2.544	1.272	.125	1.397
20	1-1/4	1.547	3.094	1.547	.125	1.672
24	1-1/2	1.807	3.614	1.807	.125	1.932
28	1-3/4	2.130	4.260	2.130	.187	2.255
32	2	2.460	4.920	2.460	.250	2.648
40	2-1/2	2.960	5.920	2.960	.250	3.148
48	3	3.460	6.920	3.460	.250	3.648

NOTES:

1. FITTINGS SHALL BE FREE FROM HANGING BURRS AND SLIVERS.
2. MAXIMUM SURFACE ROUGHNESS (REF. MIL-STD-10) 125 RHR EXCEPT AS NOTED
3. LEG CENTERLINES TO BE SQUARE WITHIN ± 2-1/2° FOR SIZES UP TO AND INCLUDING -6 AND WITHIN ± 1-1/2° FOR SIZES -8 AND ABOVE.
4. TAG OR MARK CONTAINER WITH PART NO.
5. FLUORESCENT PENETRANT INSPECT PER AMS 2645.

MATERIAL: CORROSION RESISTANT STEEL PER AMS 5745.

EXAMPLE OF CODE: VSF 1100-12, TEE-TUBE, BRAZING, FOR USE WITH 3/4 O.D. TUBING. 3 PORTS PER VSD 1001-12

DIMENSIONS IN INCHES

TOLERANCES UNLESS OTHERWISE SPECIFIED: FRACTIONS ± 1/64, DECIMALS ± .010, ANGLES ± 1°

APPROVED DATE	TITLE	STANDARD
10 June 1960	TEE - TUBE, BRAZING	VSF 1100
LATEST REVISION DATE		SHEET 1 OF 1

VOI-SHAN MANUFACTURING COMPANY
A DIVISION OF VOI-SHAN INDUSTRIES, INC.

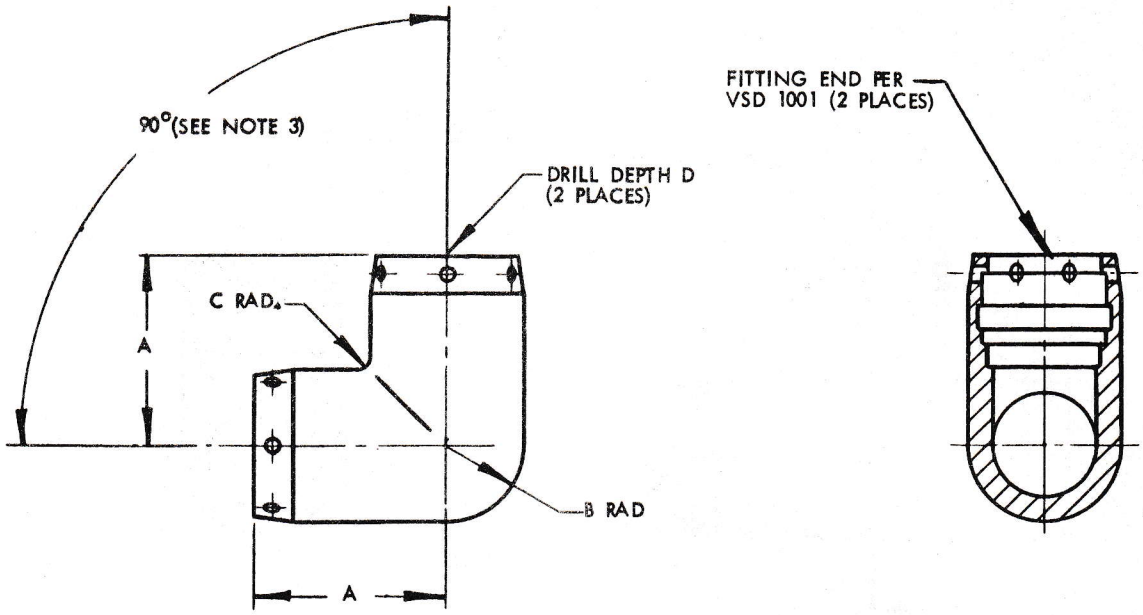

DASH NO.	TUBE O.D. REF.	A ± .020	B ± .020	C ± .020	D $^{+.040}_{-.000}$
4	1/4	.526	.166	.062	.573
5	5/16	.575	.200	.062	.622
6	3/8	.656	.235	.093	.719
8	1/2	.773	.305	.093	.836
10	5/8	.908	.376	.125	.971
12	3/4	1.028	.445	.125	1.091
16	1	1.272	.585	.125	1.397
20	1-1/4	1.547	.734	.125	1.672
24	1-1/2	1.807	.870	.125	1.932
28	1-3/4	2.130	1.005	.187	2.255
32	2	2.460	1.148	.250	2.648
40	2-1/2	2.960	1.398	.250	3.148
48	3	3.460	1.648	.250	3.648

NOTES:
1. FITTINGS SHALL BE FREE FROM HANGING BURRS AND SLIVERS.
2. MAXIMUM SURFACE ROUGHNESS (REF. MIL-STD-10) 125 RHR EXCEPT AS NOTED.
3. LEG CENTERLINES TO BE SQUARE WITHIN ± 2-1/2° FOR SIZES UP TO AND INCLUDING -6 AND WITHIN ± 1-1/2° FOR SIZES -8 AND ABOVE.
4. TAG OR MARK CONTAINER WITH PART NO.
5. FLUORESCENT PENETRANT INSPECT PER AMS 2645

MATERIAL: CORROSION RESISTANT STEEL PER AMS 5745.

EXAMPLE OF CODE: VSF 1101-24, ELBOW-TUBE, BRAZING, FOR USE WITH 1-1/2 O.D. TUBING. 2 PORTS PER VSD 1001-24.

DIMENSIONS IN INCHES

TOLERANCES UNLESS OTHERWISE SPECIFIED: FRACTIONS ± 1/64, DECIMALS ± .010, ANGLES ± 1°

APPROVED DATE	TITLE	STANDARD
10 June 1960	ELBOW -TUBE	
LATEST REVISION DATE	BRAZING	VSF 1101
		SHEET 1 OF 1

VOI-SHAN MANUFACTURING COMPANY
A DIVISION OF VOI-SHAN INDUSTRIES, INC.

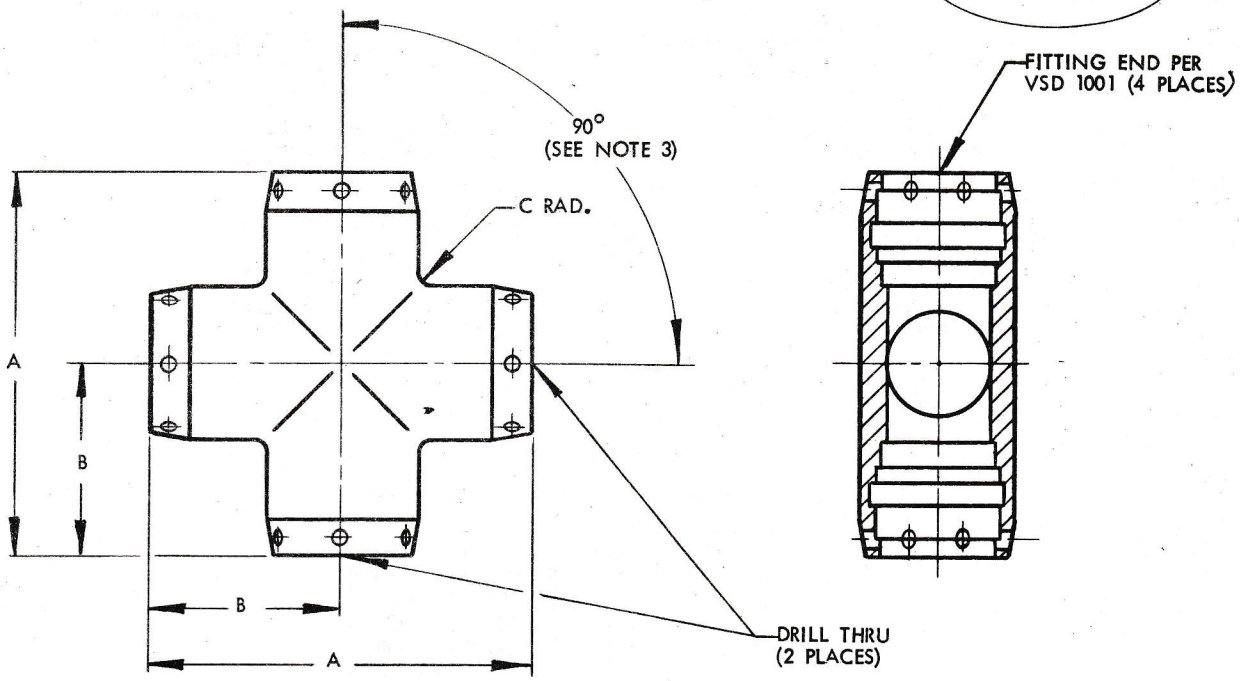

DASH NO.	TUBE O.D. (REF.)	A ± .020	B ± .010	C ± .020
4	1/4	1.052	.526	.062
5	5/16	1.150	.575	.062
6	3/8	1.312	.656	.093
8	1/2	1.546	.773	.093
10	5/8	1.816	.908	.125
12	3/4	2.056	1.028	.125
16	1	2.544	1.272	.125
20	1-1/4	3.094	1.547	.125
24	1-1/2	3.614	1.807	.125
28	1-3/4	4.260	2.130	.187
32	2	4.920	2.460	.250
40	2-1/2	5.920	2.960	.250
48	3	6.920	3.460	.250

NOTES:
1. FITTINGS SHALL BE FREE FROM HANGING BURRS AND SLIVERS.
2. MAXIMUM SURFACE ROUGHNESS (REF. MIL-STD-10) 125 RHR EXCEPT AS NOTED.
3. LEG CENTERLINES TO BE SQUARE WITHIN ± 2-1/2° FOR SIZES UP TO AND INCLUDING -6 AND WITHIN ± 1-1/2° FOR SIZES -8 AND ABOVE.
4. TAG OR MARK CONTAINER WITH PART NO.
5. FLUORESCENT PENETRANT INSPECT PER AMS 2645.

MATERIAL: CORROSION RESISTANT STEEL PER AMS 5745

EXAMPLE OF CODE: VSF 1102-10, CROSS-TUBE, BRAZING, FOR USE WITH 5/8 O.D. TUBING. 4 PORTS PER VSD 1001-10

DIMENSIONS IN INCHES

TOLERANCES UNLESS OTHERWISE SPECIFIED: FRACTIONS ± 1/64, DECIMALS ± .010, ANGLES ± 1°

APPROVED DATE	TITLE	STANDARD
10 June 1960	CROSS -TUBE, BRAZING	VSF 1102
LATEST REVISION DATE		SHEET 1 OF 1

VOI-SHAN MANUFACTURING COMPANY
A DIVISION OF VOI-SHAN INDUSTRIES, INC.

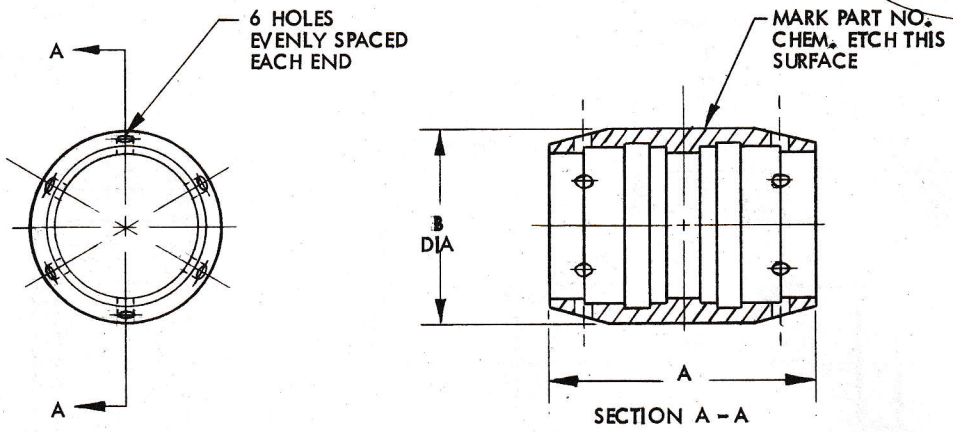

DASH NO.	TUBE O.D.	A	B +.000 -.005
-4	1/4	.468	.333
-5	5/16	.500	.401
-6	3/8	.531	.470
-8	1/2	.625	.610
-10	5/8	.687	.753
-12	3/4	.781	.890
-14	7/8	.906	1.045
-16	1	1.000	1.170
-18	1-1/8	1.125	1.316
-20	1-1/4	1.250	1.469
-22	1-3/8	1.375	1.594
-24	1-1/2	1.500	1.740
-26	1-5/8	1.625	1.886
-28	1-3/4	1.750	2.011
-30	1-7/8	1.875	2.170
-32	2	2.000	2.295

NOTES:
1. REMOVE ALL HANGING BURRS AND SLIVERS.
2. MAXIMUM SURFACE ROUGHNESS (REF. MIL-STD. -10) 125 RHR UNLESS OTHERWISE NOTED.
3. ALL FILLET RADII .005 - .020.
4. DASH NO. INDICATES TUBE O.D. IN SIXTEENTHS OF AN INCH.
5. PARTS TO BE CLEANED PER VS-VSF-5-1.

MATERIAL:
ADD A AFTER DASH NUMBER FOR AM350 CORROSION RESISTANT STEEL PER AMS 5745.
ADD B AFTER DASH NUMBER FOR AM355 CORROSION RESISTANT STEEL PER AMS 5743.
ADD C AFTER DASH NUMBER FOR CORROSION RESISTANT STEEL TYPE 321 PER AMS 5645.
ADD T AFTER DASH NUMBER FOR TITANIUM ALLOY 6AL-4V STABILIZED ANNEALED PER AMS 4928.

SURFACE TREATMENT:
CORROSION RESISTANT STEEL: PASSIVATE PER MIL-S-5002.
TITANIUM ALLOY: NONE.

EXAMPLE OF CODE:
VSF 1103-10A, CRES. STEEL, AM 350 UNION, BRAZED FITTING, FOR USE WITH 5/8 O.D. TUBING.
VSF 1103-10T, TITANIUM ALLOY, UNION, BRAZED FITTING, FOR USE WITH 5/8 O.D. TUBING.

DIMENSIONS IN INCHES
TOLERANCES UNLESS OTHERWISE NOTED: ANGLES ±1°, DECIMALS ±.005, FRACTIONS ± 1/64.

APPROVED DATE	TITLE	STANDARD
10 JUNE 1960	UNION BRAZED FITTING TYPE 1	VSF1103
LATEST REVISION DATE 25 OCTOBER 1960		SHEET 1 OF 1

VOI-SHAN MANUFACTURING COMPANY
A DIVISION OF VOI-SHAN INDUSTRIES, INC.

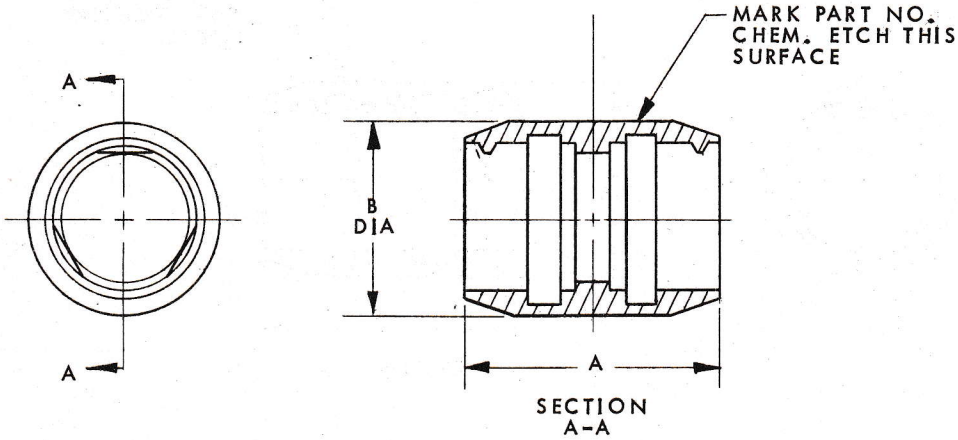

DASH NO.	TUBE O.D.	A ±.010	B +.005 -.000
-4	1/4	.653	.338
-6	3/8	.596	.525
-8	1/2	.665	.715
-10	5/8	.727	.875
-12	3/4	.791	.905
-16	1	.980	1.165
-20	1-1/4	1.240	1.464

NOTES:

1. REMOVE ALL HANGING BURRS AND SLIVERS.
2. MAXIMUM SURFACE ROUGHNESS (REF. MIL-STD. - 10) 125 RHR UNLESS OTHERWISE NOTED.
3. ALL FILLET RADII .005 - .020.
4. DASH NO. INDICATES TUBE O.D. IN SIXTEENTHS OF AN INCH.
5. PARTS TO BE CLEANED PER VS-VSF-5-1.

MATERIAL:

ADD A AFTER DASH NUMBER FOR AM 350 CORROSION RESISTANT STEEL PER AMS 5745.
ADD B AFTER DASH NUMBER FOR AM 355 CORROSION RESISTANT STEEL PER AMS 5743.
ADD C AFTER DASH NUMBER FOR CORROSION RESISTANT STEEL TYPE 321 PER AMS 5645.
ADD T AFTER DASH NUMBER FOR TITANIUM ALLOY 6AL-4V STABILIZED ANNEALED PER AMS 4928.

SURFACE TREATMENT:

CORROSION RESISTANT STEEL: PASSIVATE PER MIL-S-5002.
TITANIUM ALLOY: NONE.

EXAMPLE OF CODE:

VSF 1104-10A, CRES. STEEL, AM 350, UNION, BRAZED FITTING, FOR USE WITH 5/8 O.D. TUBING.
VSF 1104-10T, TITANIUM ALLOY, UNION, BRAZED FITTING, FOR USE WITH 5/8 O.D. TUBING.

DIMENSIONS IN INCHES
TOLERANCES UNLESS OTHERWISE NOTED: ANGLES ±1°, DECIMALS ±.005, FRACTIONS ±1/64

APPROVED DATE	TITLE	STANDARD
25 OCTOBER 1960	UNION BRAZED FITTING TYPE 11	VSF 1104
LATEST REVISION DATE		SHEET 1 OF 1

VOI-SHAN MANUFACTURING COMPANY
A DIVISION OF VOI-SHAN INDUSTRIES, INC.

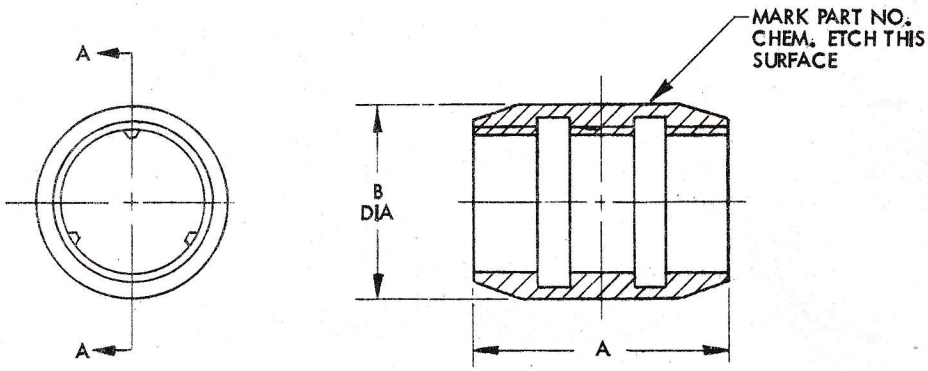

SECTION A - A

DASH NO.	TUBE O.D.	A ±.010	B +.005 -.000
-4	1/4	.653	.338
-6	3/8	.596	.525
-8	1/2	.665	.715
-10	5/8	.727	.875
-12	3/4	.791	.905
-16	1	.980	1.165

NOTES:
1. REMOVE ALL HANGING BURRS AND SLIVERS.
2. MAXIMUM SURFACE ROUGHNESS (REF. MIL-STD. -10) 125 RHR UNLESS OTHERWISE NOTED.
3. ALL FILLET RADII .005 - .020.
4. DASH NO. INDICATES TUBE O.D. IN SIXTEENTHS OF AN INCH.
5. PARTS TO BE CLEANED PER VS-VSF-5-1.

MATERIAL:
ADD A AFTER DASH NUMBER FOR AM 350 CORROSION RESISTANT STEEL PER AMS 5745.
ADD B AFTER DASH NUMBER FOR AM 355 CORROSION RESISTANT STEEL PER AMS 5743.
ADD C AFTER DASH NUMBER FOR CORROSION RESISTANT STEEL TYPE 321 PER AMS 5645.
ADD T AFTER DASH NUMBER FOR TITANIUM ALLOY 6AL-4V STABILIZED ANNEALED PER AMS 4928.

SURFACE TREATMENT:
CORROSION RESISTANT STEEL: PASSIVATE PER MIL-S-5002.
TITANIUM ALLOY: NONE.

EXAMPLE OF CODE:
VSF 1105-10A, CRES. STEEL, AM 350, UNION, BRAZED FITTING, FOR USE WITH 5/8 O.D. TUBING.
VSF 1105-10T, TITANIUM ALLOY, UNION, BRAZED FITTING, FOR USE WITH 5/8 O.D. TUBING.

DIMENSIONS IN INCHES
TOLERANCES UNLESS OTHERWISE NOTED: ANGLES ±1°, DECIMALS ±.005, FRACTIONS ± 1/64.

APPROVED DATE	TITLE	STANDARD
25 OCTOBER 1960	UNION BRAZED FITTING TYPE 111	VSF1105
LATEST REVISION DATE		SHEET 1 OF 1